Towards Sagnac speed meter interferometers for gravitational wave detection

Christian Gräf

for the Glasgow Sagnac Speed Meter Team

ICONO/LAT Conference, September 2016

Minsk, Belarus

LIGO-G1601997

Outline

- **Motivation for Speed Meter GW detectors**
  - **Quantum noise**
  - **Speed meter configurations**
- **Introducing the Glasgow Sagnac Speed Meter proof of concept experiment**
  - **Design and scientific aims**
  - **Current status of the experiment**
- **Future directions in Speed Meter research at Glasgow**

Gravitational wave detectors

Second generation detector network

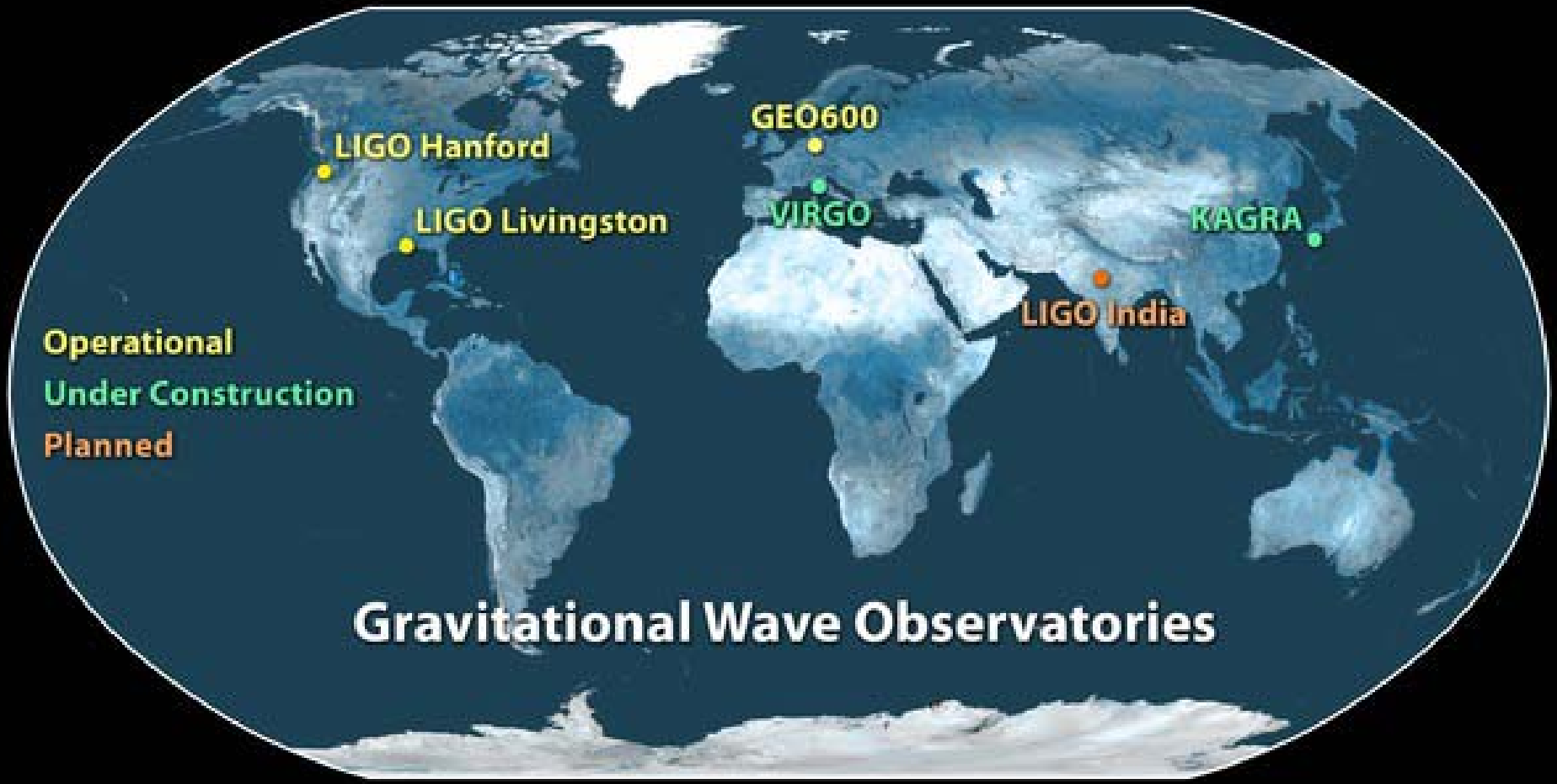

Detecting gravitational waves with light

- Use speed of light as meter stick
- Compare travel time along two orthogonal arms

$$\tau_x = \frac{2L}{c} + \frac{1}{2} \int_{t-2\frac{L}{c}}^{t} h_+(t')dt',$$

Phase

Laser frequency

$$-\varphi = \omega_0 \tau_x$$

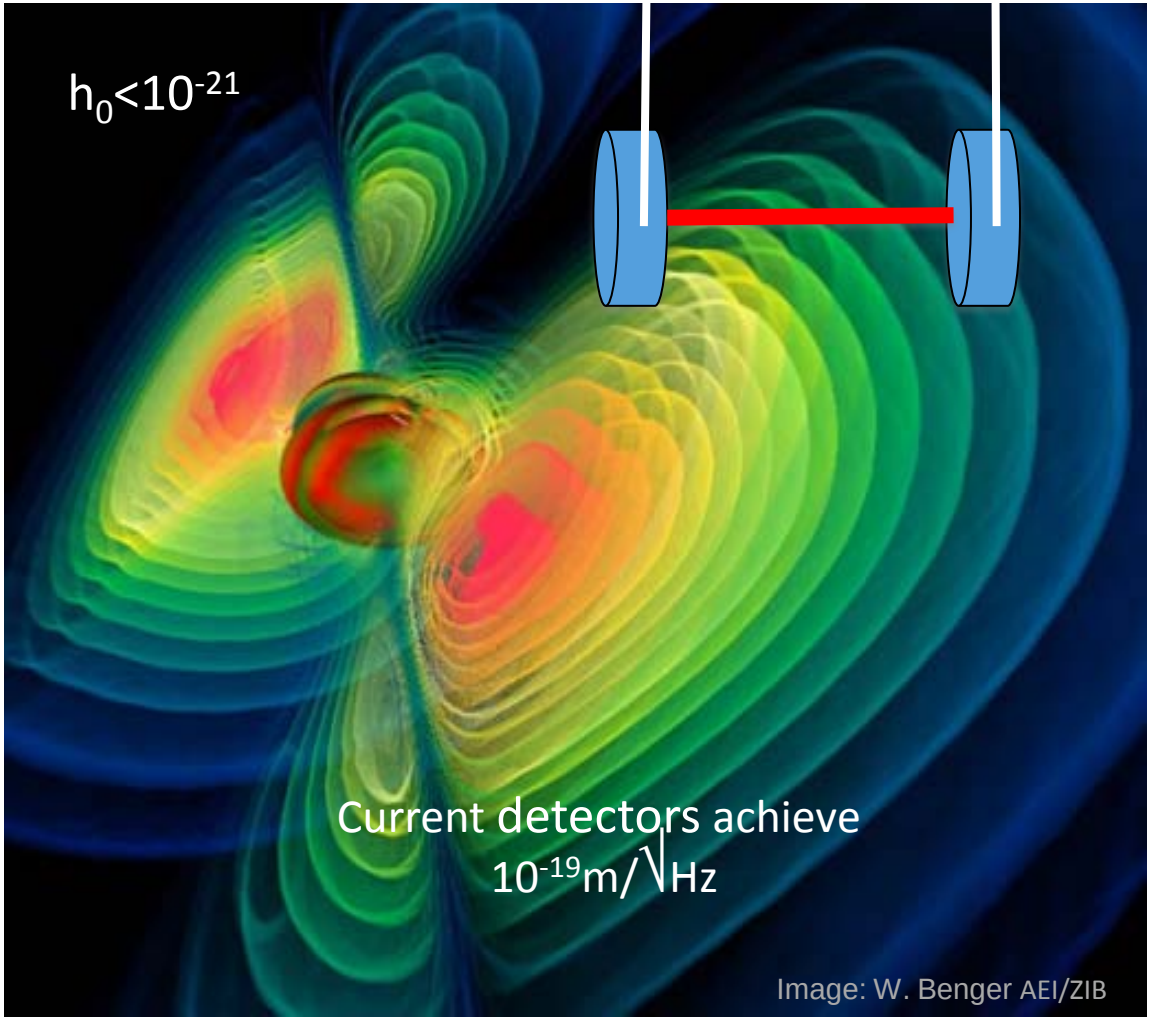

Position measurement

- RPN is back-action noise; a measurement of the test-mass position disturbs the test mass
- This is because we use position meters, and $[\hat{x}(t), \hat{x}(t')] \neq 0$
- Second generation of GW detectors will be limited by radiation-pressure noise at low frequencies

Quantum noise in 2nd generation detectors

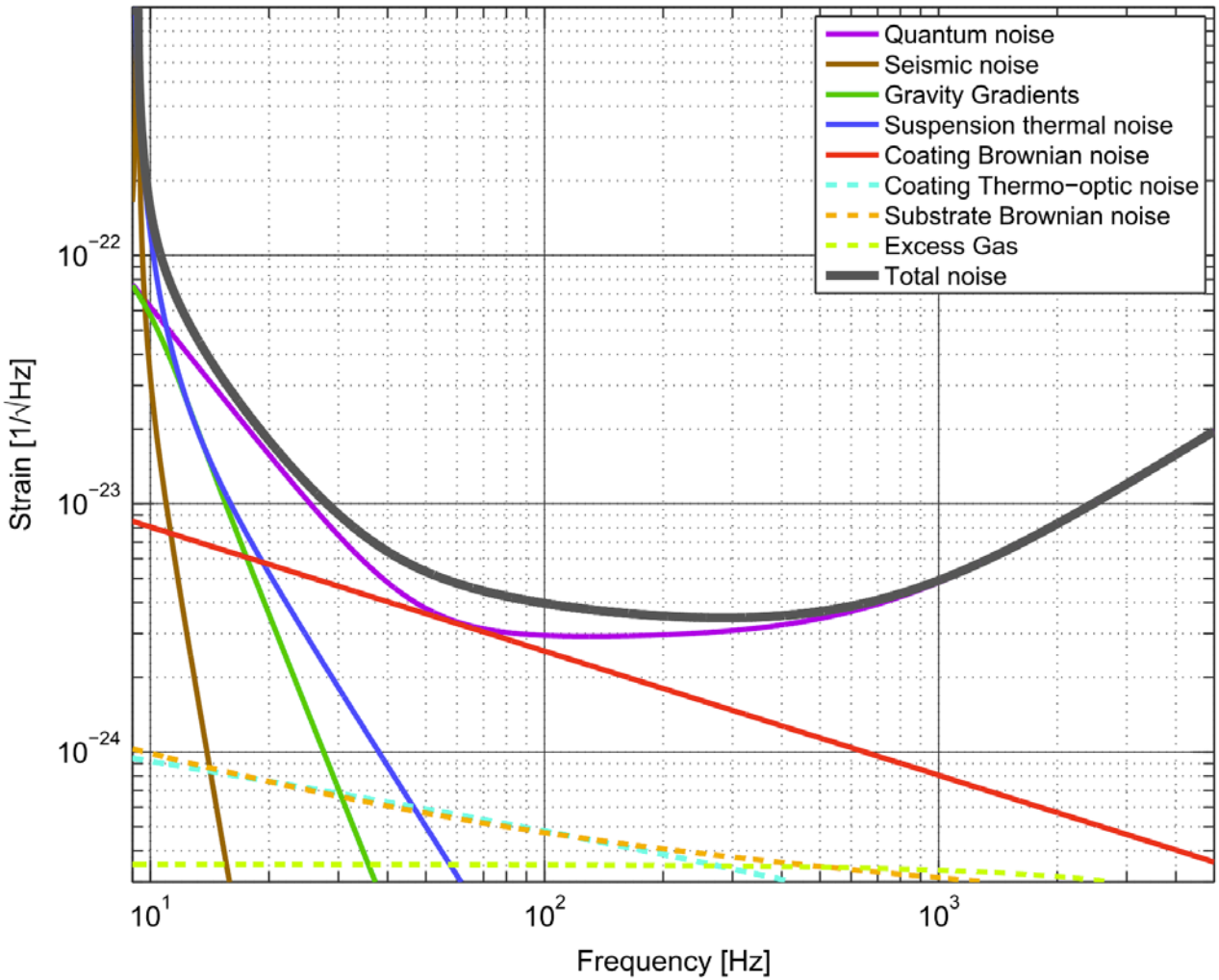

The LIGO Scientific Collaboration 2015 *Class. Quantum Grav.* 32 074001

The speed meter concept

- To get rid of back-action noise, need quantum-nondemolition (QND) measurement
- Need to measure observable that is an integral of motion
- The momentum $\hat{p}(t)$ of a free test mass is a conserved quantity, so $[\hat{p}(t), \hat{p}(t')] = 0$

Speed can be regarded as a proxy for momentum.

QRPN is naturally reduced in speed meters!

Early ideas

- Speed meter concept proposed by Braginsky & Khalili (1990)
  - Idea based around weakly coupled resonators, transforming a position signal in one resonator into a velocity signal in the other
- Implementation ideas for actual interferometers, e.g.
  - coupled cavities by BGKT (2000),
  - sloshing cavity approach by Purdue & Chen (2002)
- Sagnac speed meter proposed by Chen in (2003)

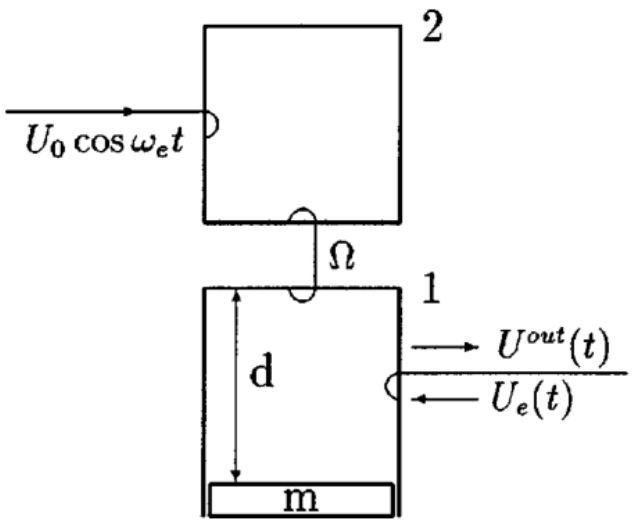

V. Braginsky and F. Khalili. Physics Letters A, 147(5):251 – 256, 1990.

» Surprisingly, so far as we are aware nobody has previously noticed that, because the Sagnac interferometer is sensitive only to the *time-dependent part* of the arm-length difference, it is automatically a speed meter. Moreover, as we

Sagnac speed meter interferometers

Y. Chen (2003): Sangac interferometers measure the **relative velocity** their mirror test masses, position information cancels – "**speed meters**"

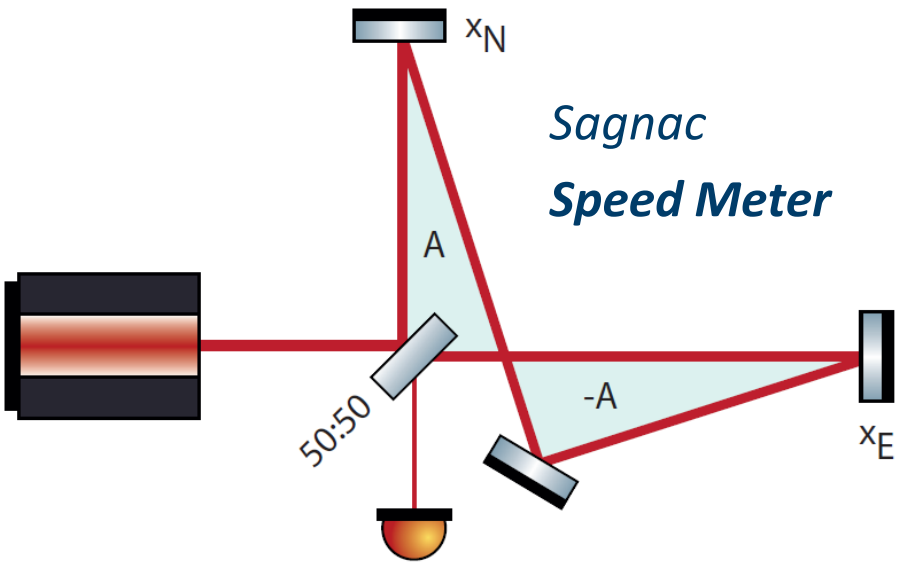

$$\phi_{\mathrm{cw}} \propto x_{\mathrm{N}}(t) + x_{\mathrm{E}}(t+\tau)$$
$$\phi_{\mathrm{ccw}} \propto x_{\mathrm{E}}(t) + x_{\mathrm{N}}(t+\tau)$$

$$\Delta\phi = x_{\mathrm{N}}(t) - x_{\mathrm{N}}(t+\tau) + - \left[x_{\mathrm{E}}(t) - x_{\mathrm{E}}(t+\tau)\right] \approx \tau(\dot{x}_{\mathrm{E}}(t) - \dot{x}_{\mathrm{N}}(t))$$

Tech note ***Review of QND schemes for the Einstein Telescope (2009)*** emphasized the advantage of **better low-frequency QN limited sensitivity** of **speed meters.**

Speed meter vs position meter: quantum noise

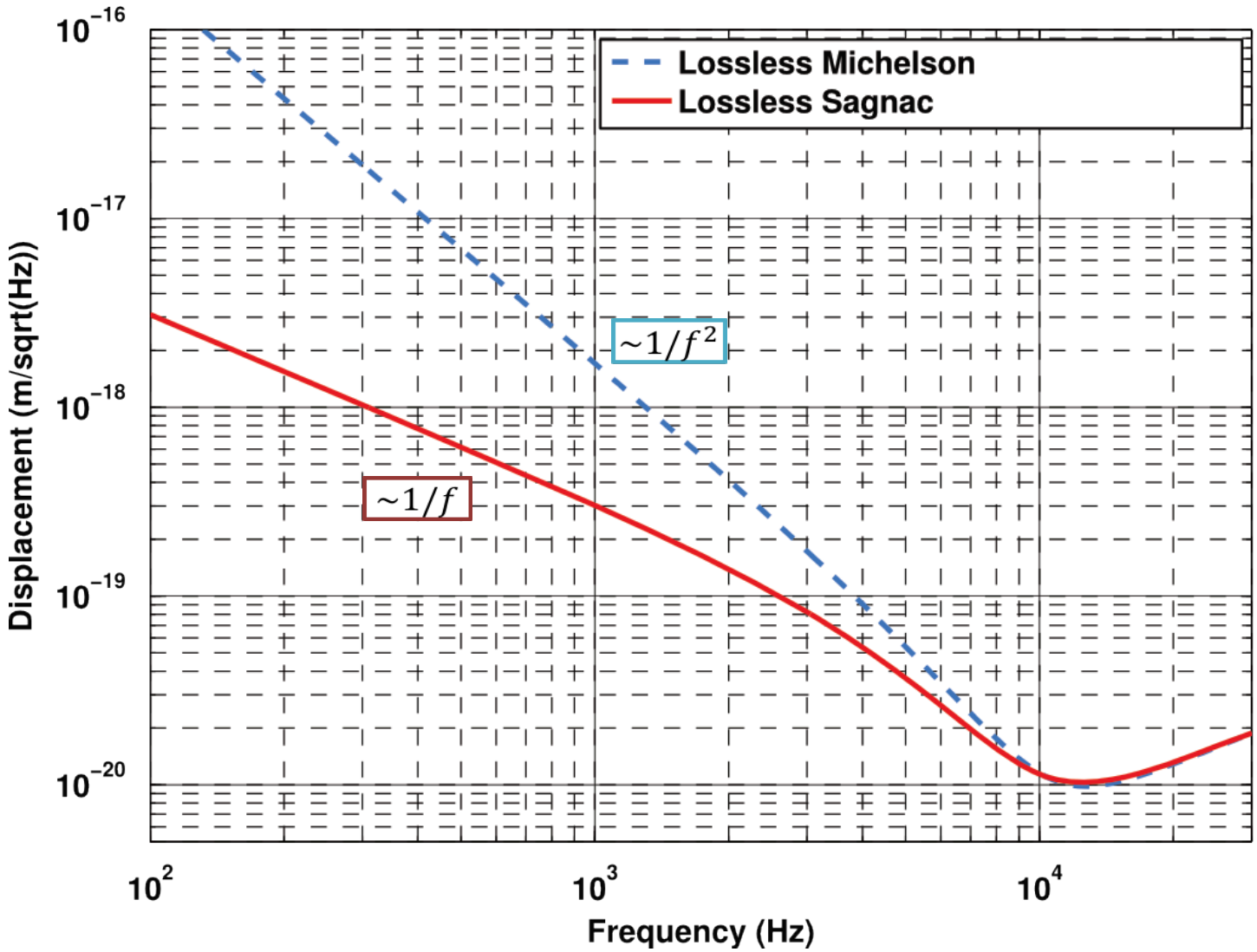

Why speed meters?

IOP Publishing Classical and Quantum Gravity
Class. Quantum Grav. **31** (2014) 165010 (33pp) doi:10.1088/0264-9381/31/16/165010

Quantum limits of interferometer topologies for gravitational radiation detection

Haixing Miao, Huan Yang, Rana X Adhikari and Yanbei Chen

Division of Physics, Math, and Astronomy, California Institute of Technology, Pasadena, CA 91125, USA

E-mail: rana@caltech.edu

Received 24 February 2014, revised 7 July 2014
Accepted for publication 8 July 2014
Published 5 August 2014

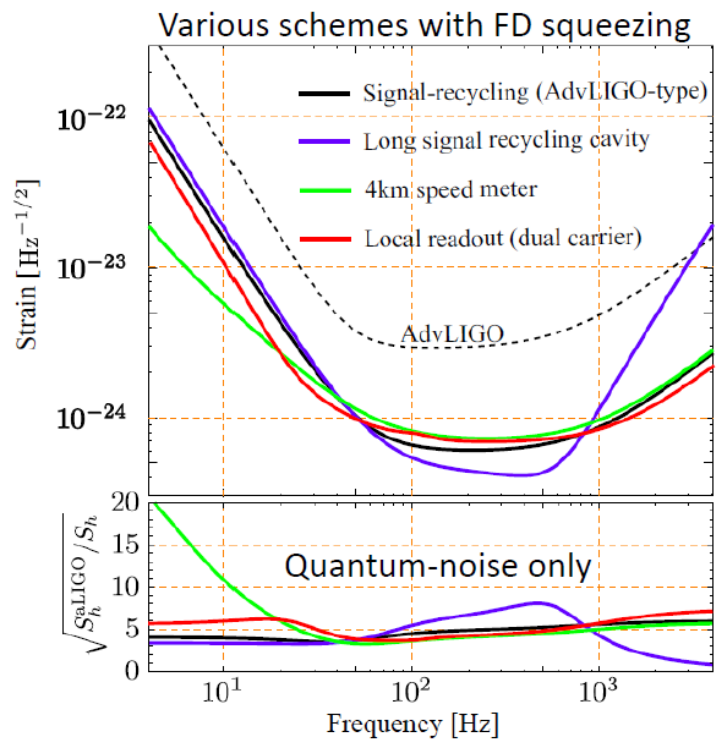

simplicity compared with other schemes. If the low-frequency thermal noise can be reduced in the future, the speed meter and the multiple-carrier scheme can provide significant low-frequency enhancement of the sensitivity. This extra enhancement will, for some low enough thermal noise, be enough to compensate for the extra complexity.

Why speed meters?

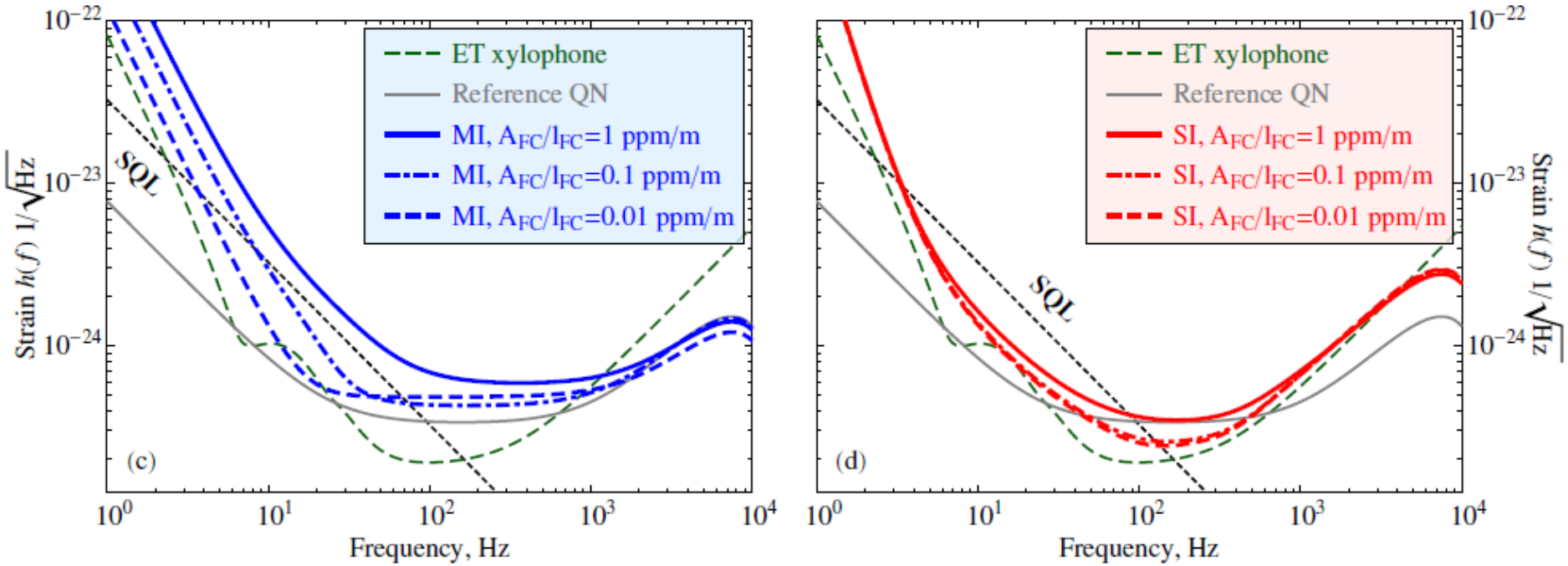

Modelled by N. Voronchev and S. Danilishin

Zoo of configurations

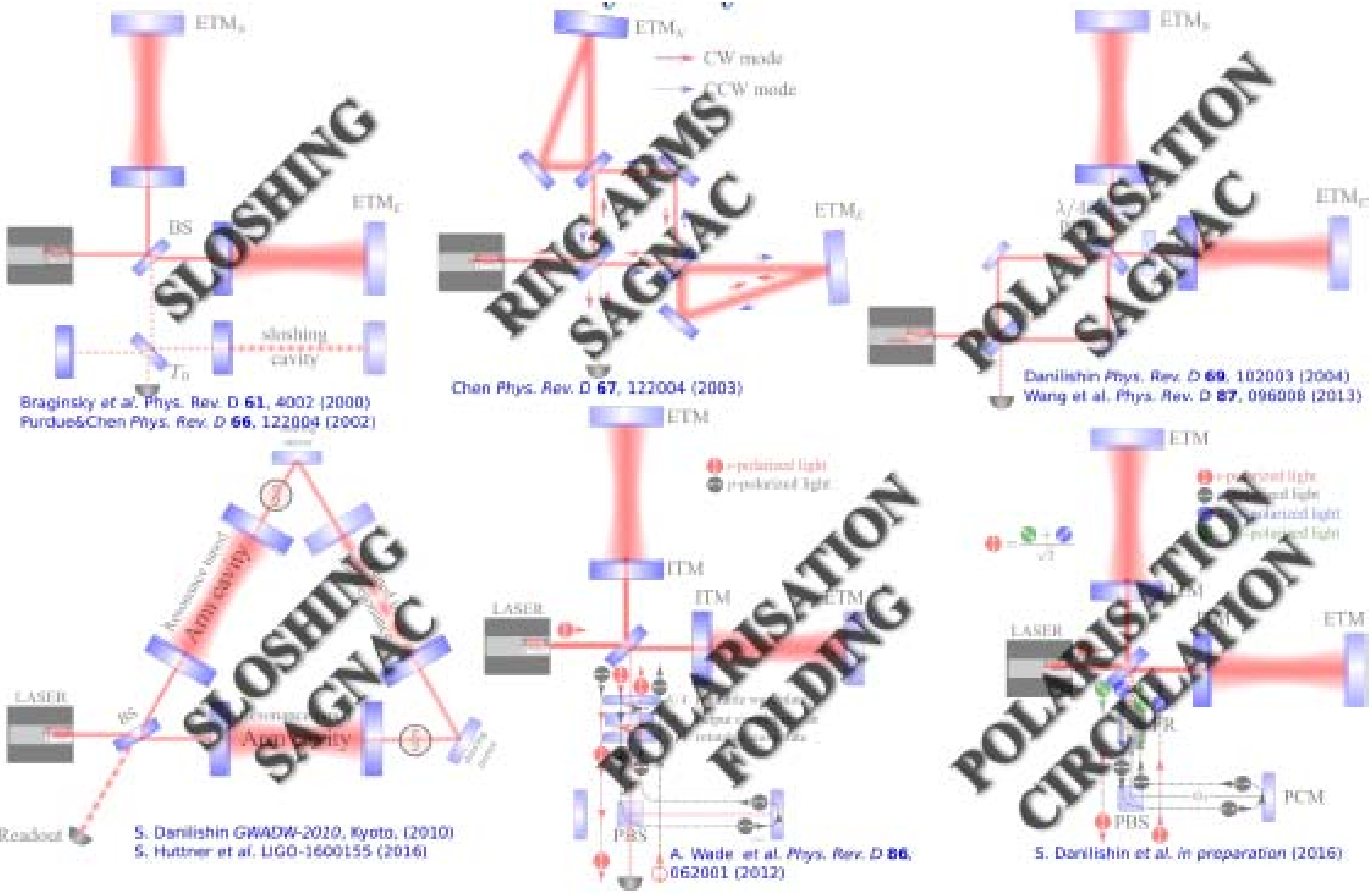

Outline

- **Motivation for Speed Meters**
  - **Quantum noise**
  - **Speed meter configurations**
- **Introducing the Glasgow Sagnac Speed Meter proof of concept experiment**
  - **Design and scientific aims**
  - **Current status of the experiment**
- **Future directions in Speed Meter research at Glasgow**

Glasgow Speed Meter proof-of-principle experiment

The Glasgow Sagnac Speed Meter proof-of-principle experiment is an European Research Council funded project (project lead Prof. Stefan Hild) with three major goals:

1. **Create an ultra-low noise speed meter testbed which is dominated by quantum radiation pressure noise**
2. **Demonstrate the back-action noise cancellation of the Sagnac topology**
3. **Explore speed meter technology for future GW detectors**

Conceptual design

- In-vacuum operation, passive multi-stage seismic pre-isolation (+ maybe active as well)
- Triangular arm cavities with monolithically suspended mirrors
- 1g ITMs, 100g ETMs
- 2.8m cavity round trip length, Finesse ~9000, 20ppm – 30ppm loss per round trip
- Approx. 5kW of intra-cavity power
- Large laser beam spots to reduce coating Brownian thermal noise
- In vacuum suspended balanced homodyne detector

More details: Ch. Gräf et al, CGQ 31, 215009 (2014)

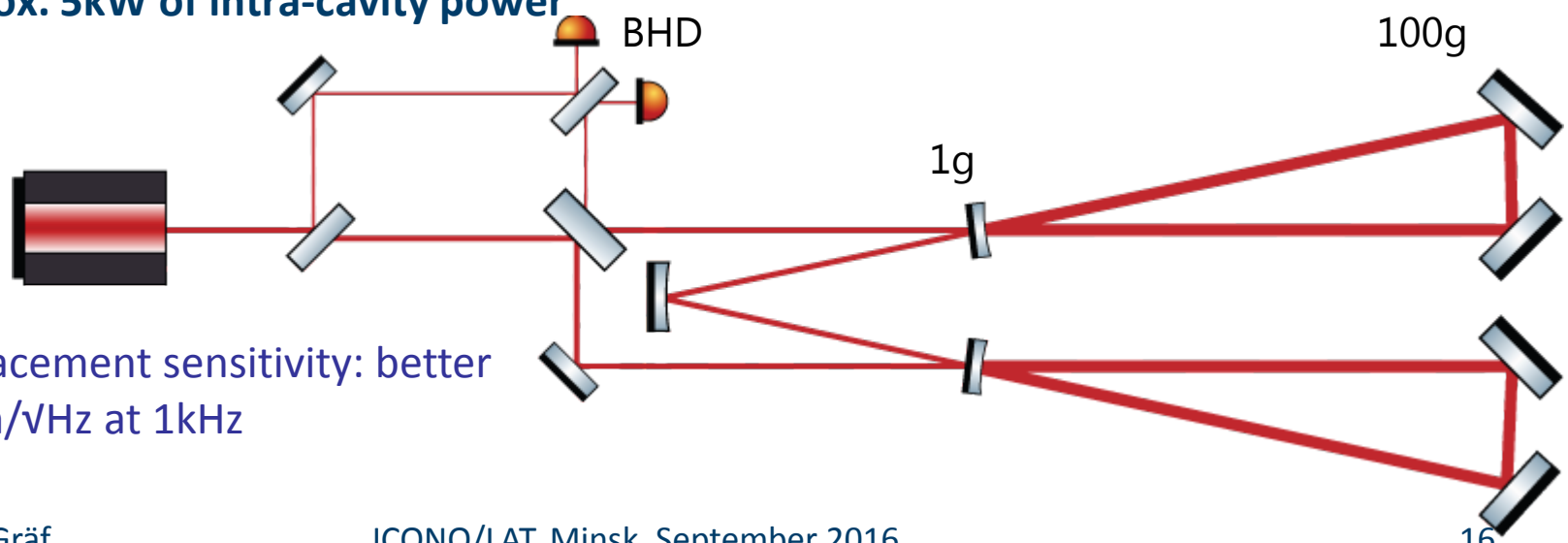

Target displacement sensitivity: better than 10^{-18} m/√Hz at 1kHz

How will we reach this goal?

- Show that Sagnac configuration can beat the equivalent Michelson configuration
- Need low-mass optics and high laser powers so that Michelson would be backaction-noise limited
- Aim for 2-3x better sensitivity between 100Hz and 1kHz
- Assume Michelson is understood well enough
  - Won't actually build it
  - Go straight for Sagnac

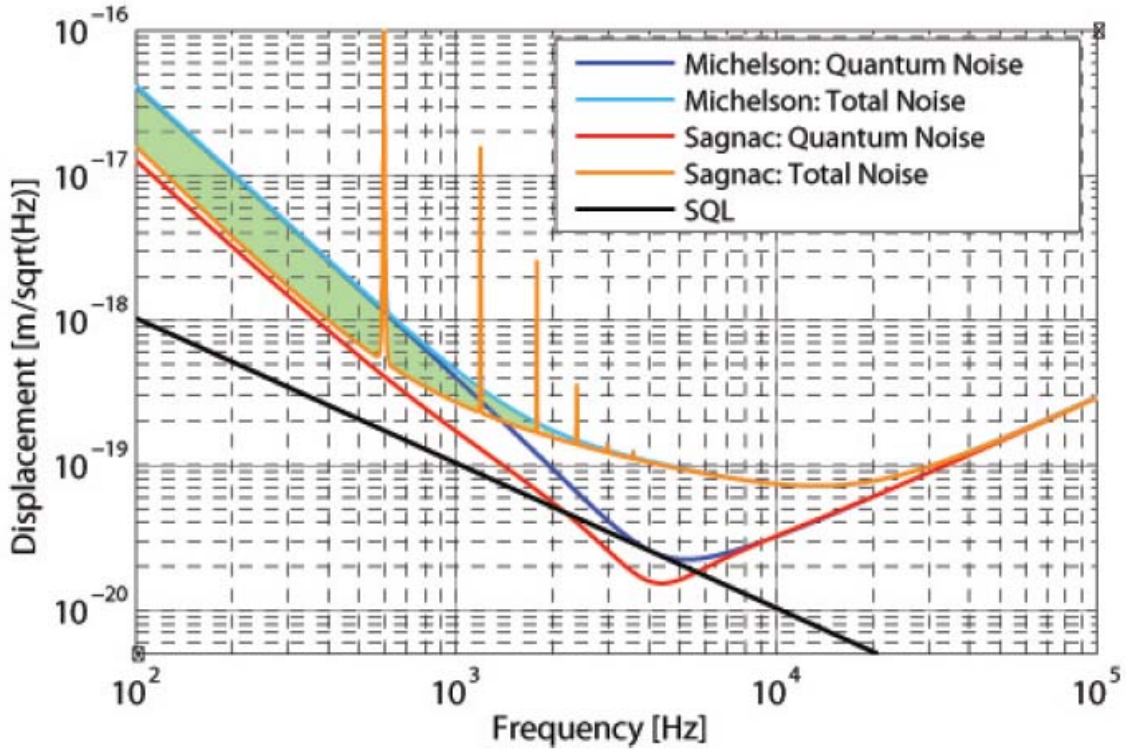

More details: Ch. Gräf et al, CGQ 31, 215009 (2014)

Refined quantum noise model

Modelling QN of a realistic Sagnac with imperfections

- Approximations and simplifications restricted the validity of previous models
- New model based on two-photon transfer matrix approach, arm cavities modelled independently
- Small and large scale configurations with round trip loss, BS imperfections, ITM transmissivity imbalance, ... now covered

More details: S. L. Danilishin, et al., NJP, 17(4):043031 (2015)

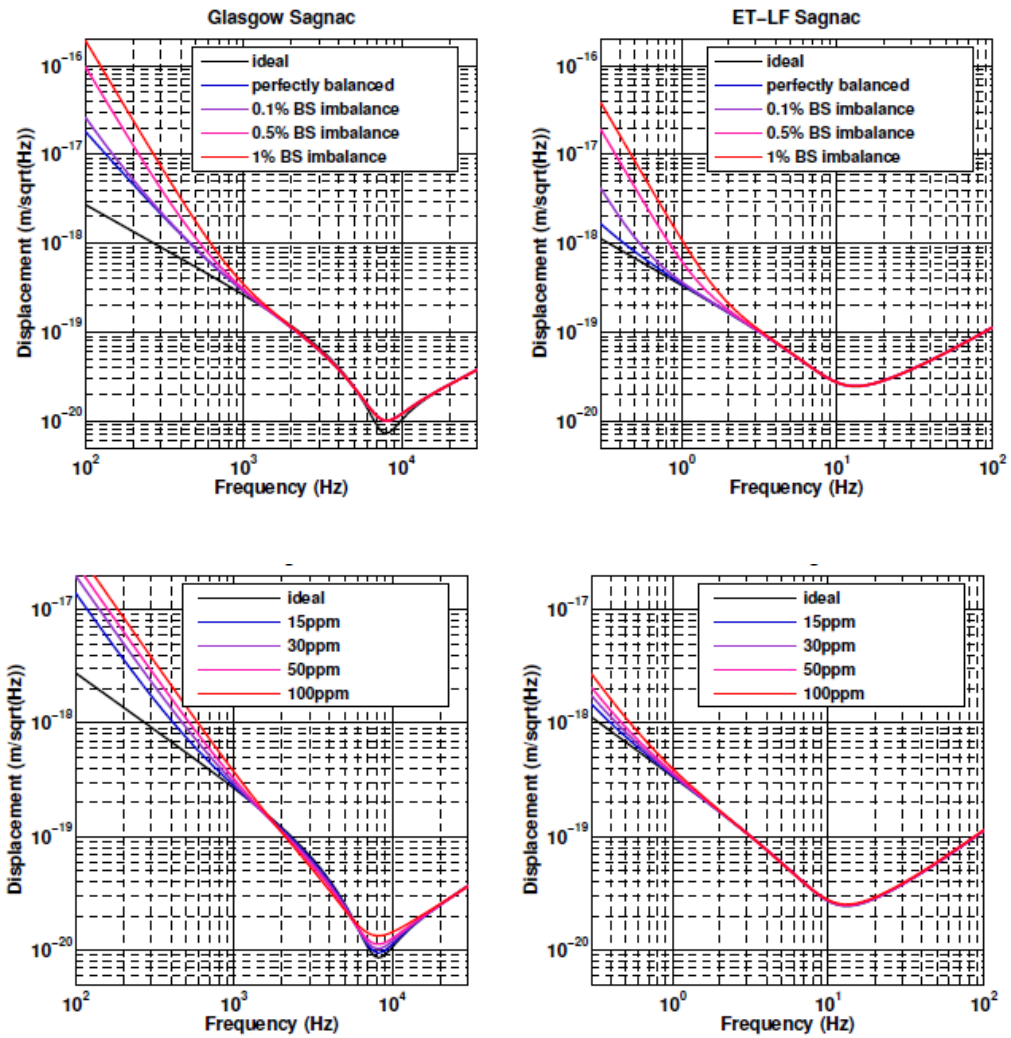

Vacuum system and seismic pre-isolation

- Two GEO600-style vacuum chambers
- Four layer seismic isolation stack: fluorel springs + 60kg stainless discs
- Custom-made circular optical breadboards
- Stiffening with a truss structure, to ensure rigid motion along the longitudinal axis at low freqencies

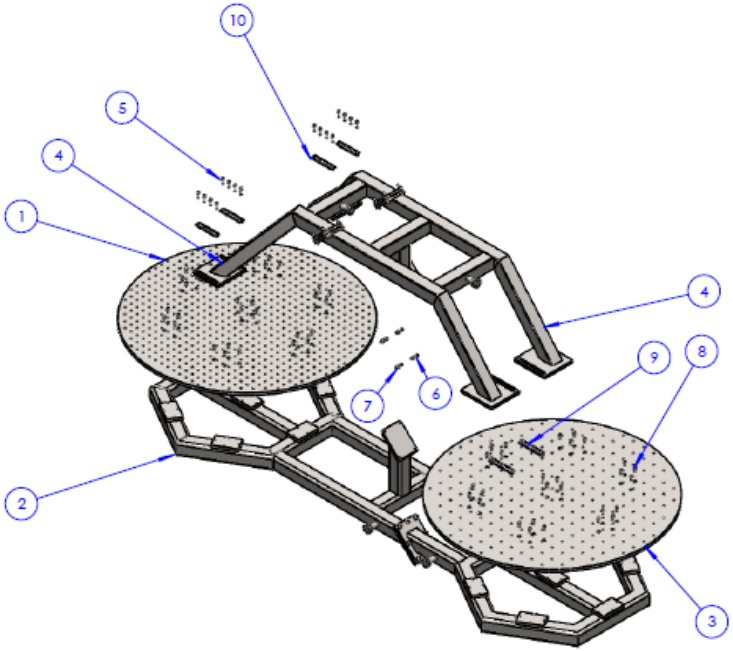

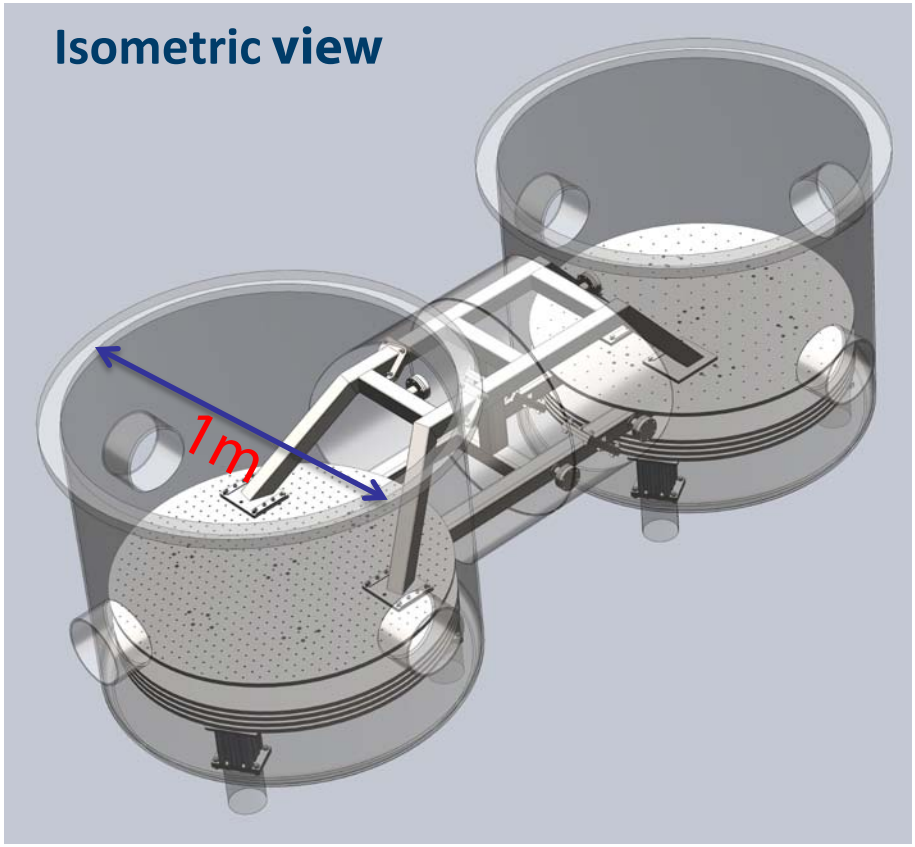

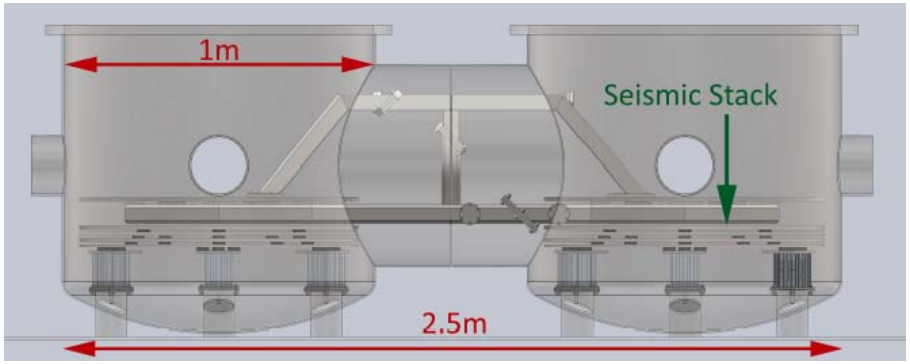

Vacuum system and seismic pre-isolation

- Two GEO600-style vacuum chambers
- Four layer seismic isolation stack: fluorel springs + 60kg stainless discs
- Custom-made circular optical breadboards
- Stiffening with a truss structure, to ensure rigid motion along the longitudinal axis at low freqencies

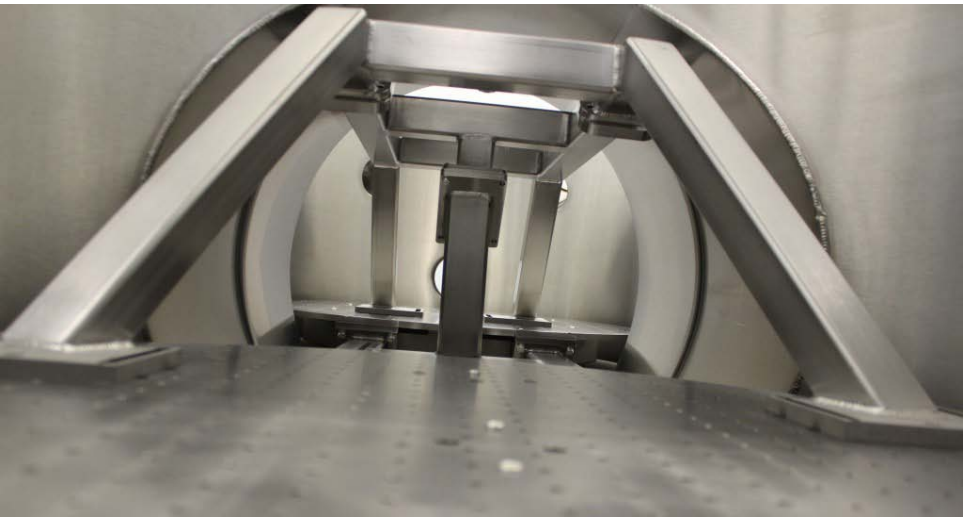

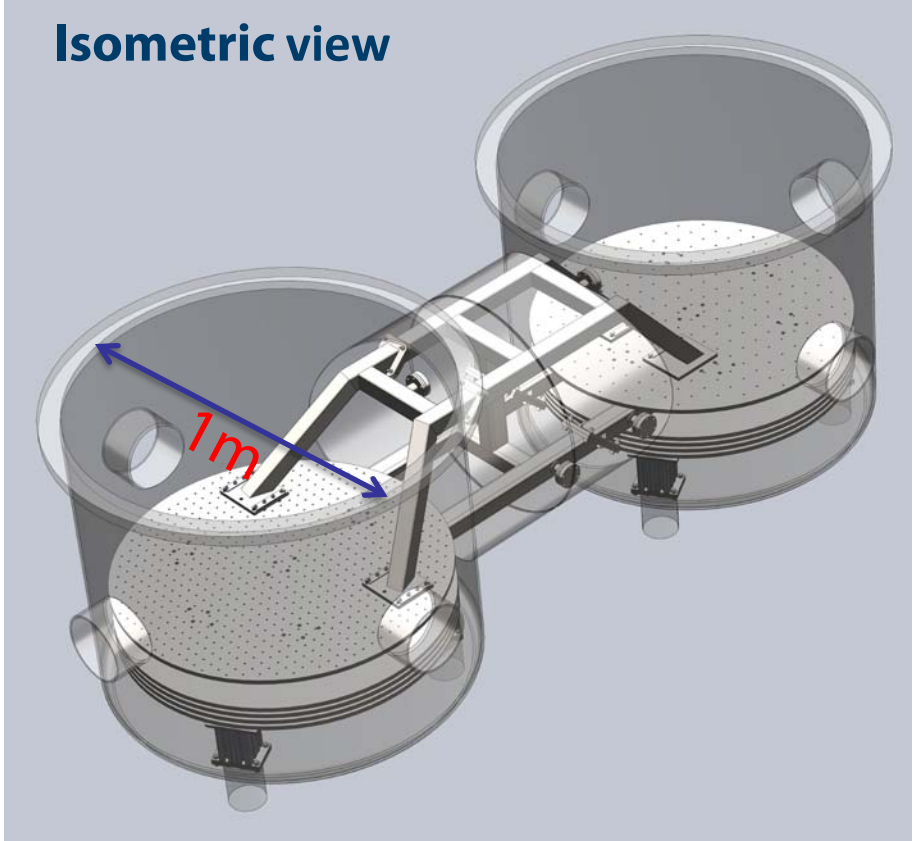

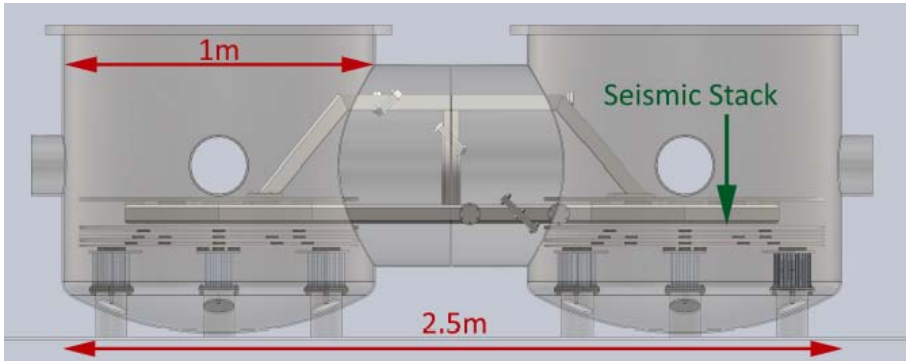

Optical layout

One gram input test masses

Triangular arm cavities, 2.83m round-trip length

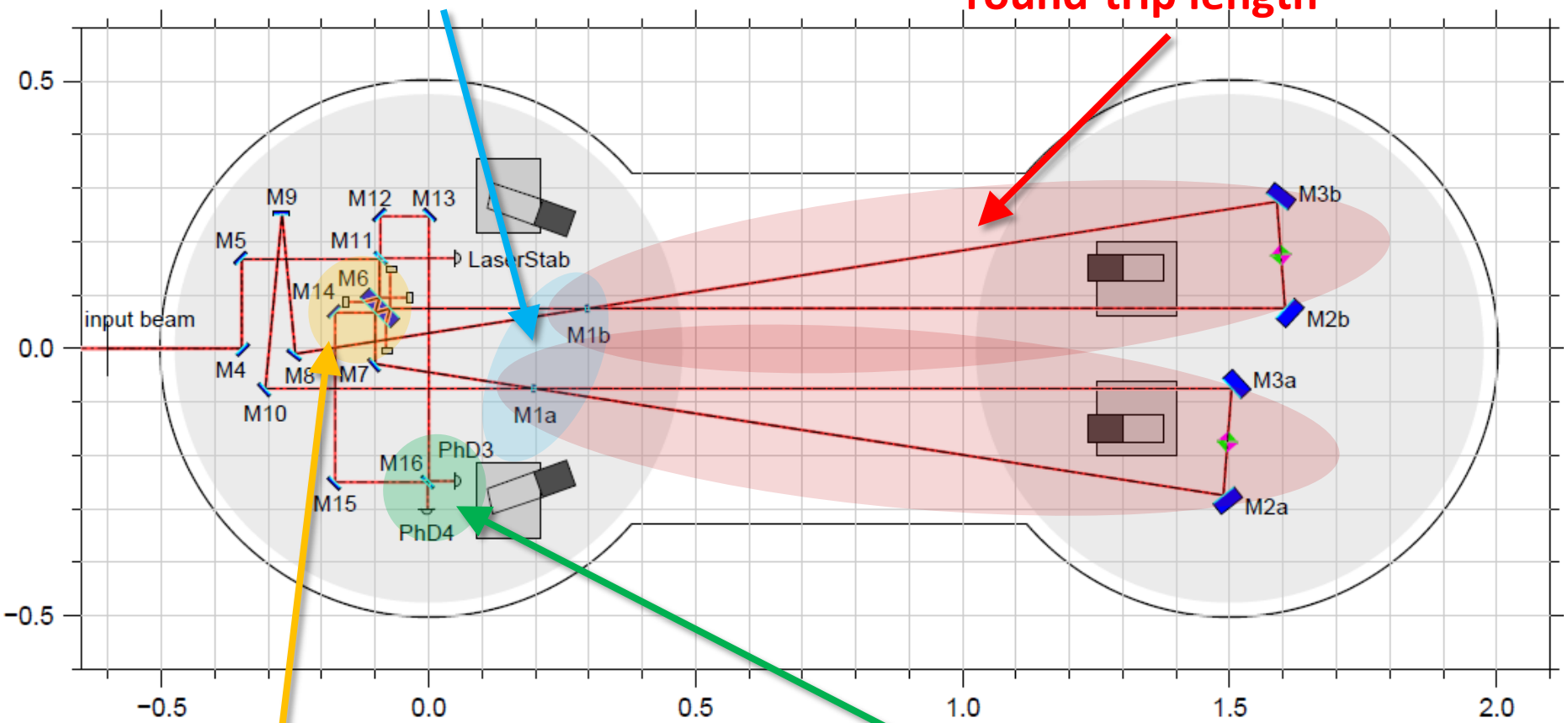

Main Sagnac beam splitter

In-vacuum balanced homodyne detector

Beam splitter and detection chamber

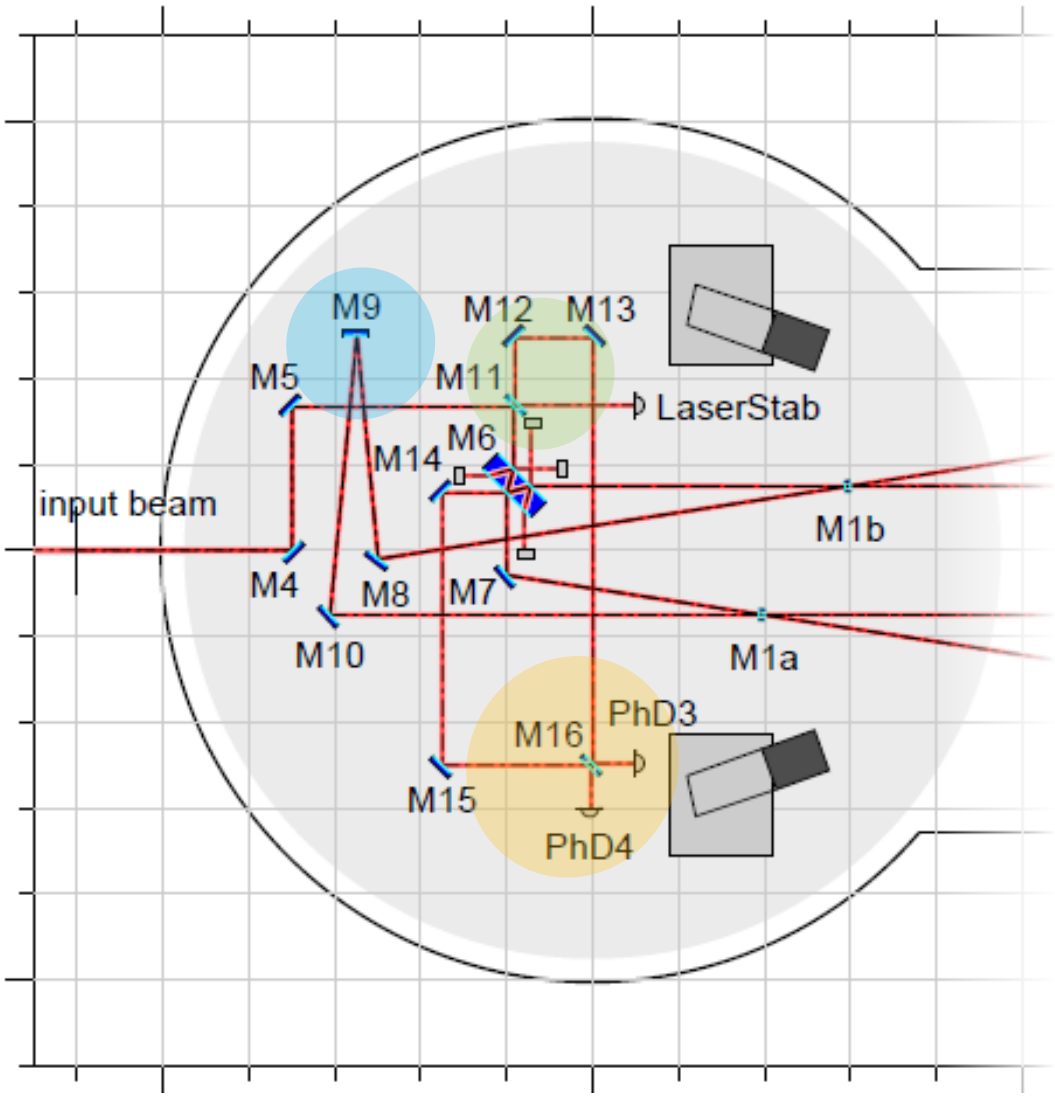

- >15 suspended optics
- Large BS for good separation of multiply reflected beams
- **Curved mirror M9 to mode match the arm cavities among each other**
- **In-vacuum suspended balanced homodyne detector**
- **Local oscillator field for homodyne detection picked of from Sagnac common mode**

Auxiliary suspensions

- **Auxiliary suspension design complete**
  - Steering optics with coil/magnet actuators at upper mass

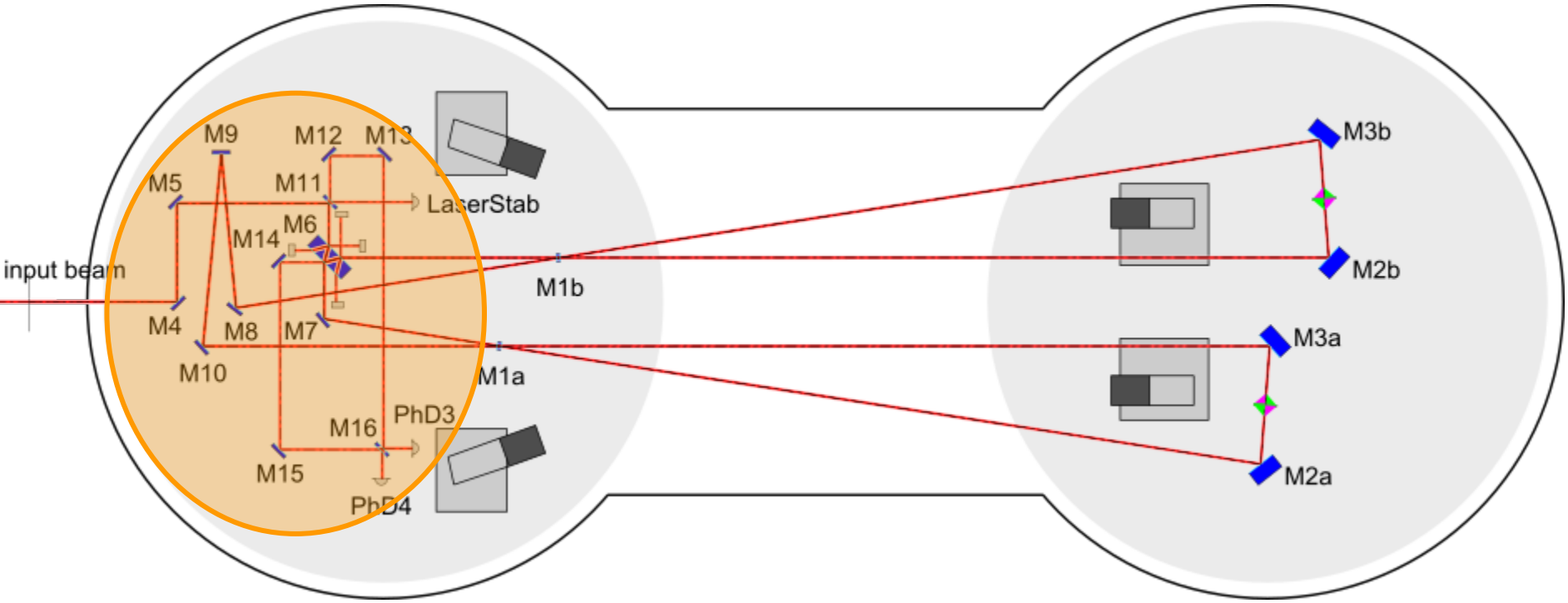

Auxiliary suspensions

- **Auxiliary suspension design complete**
  - Steering optics with coil/magnet actuators at upper mass
  - Two pendulum stages, steel wires; no vertical stage

Double pendulum suspension for auxiliary optics

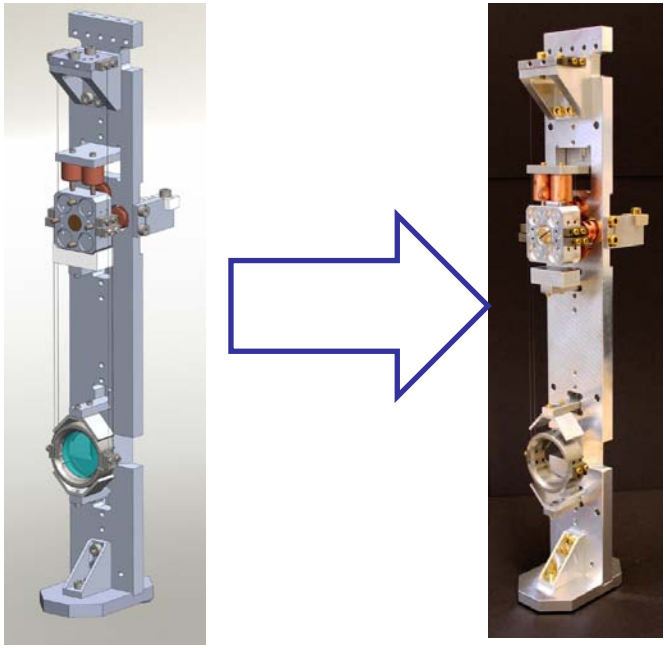

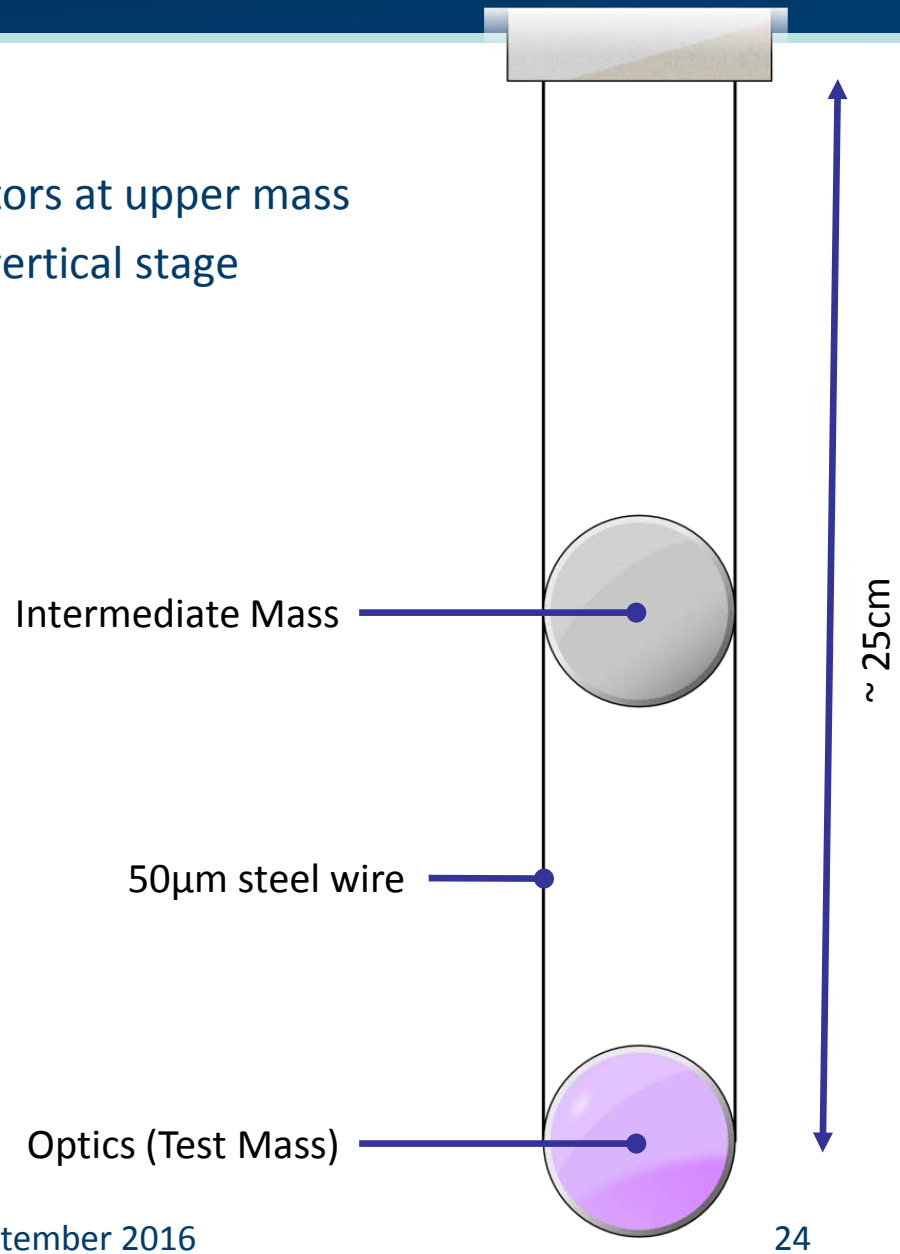

Auxiliary suspensions before ...

Auxiliary suspensions before ... and after

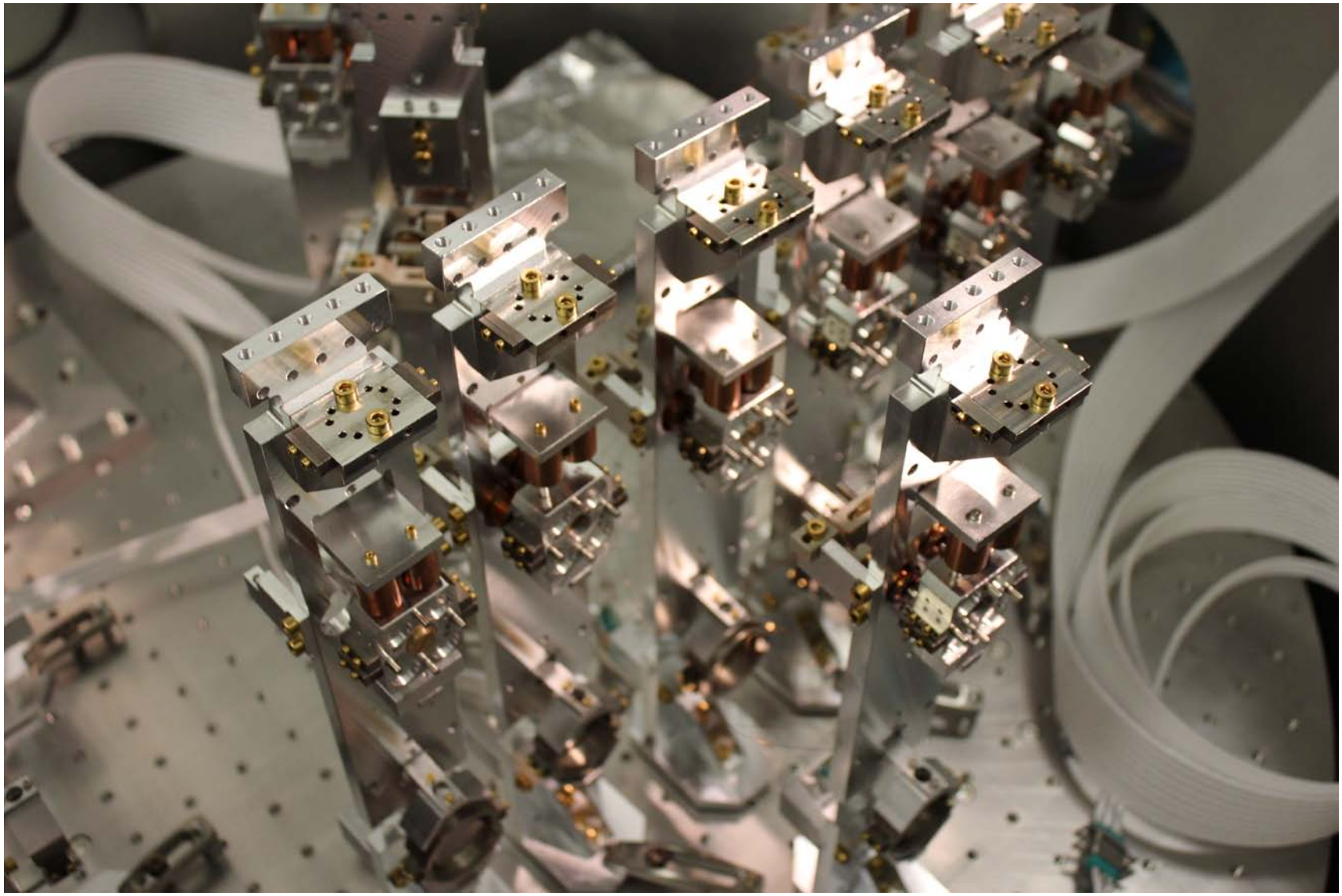

End mirror suspensions

- **Arm cavity end mirror suspensions**
  - Design based on AEI 10m SQL IFO suspensions

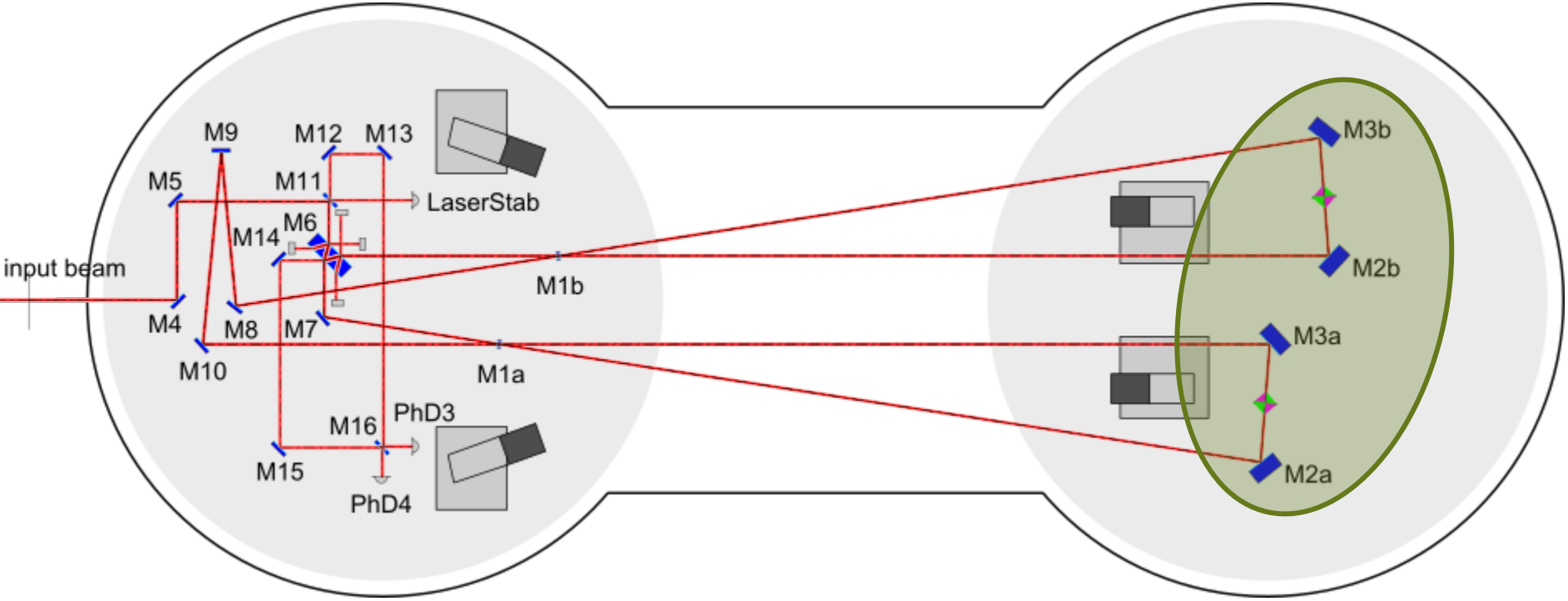

End mirror suspensions

- **Arm cavity end mirror suspensions**
  - Design based on AEI 10m SQL IFO suspensions
  - Triple pendulum stages with all-monolithic final stage
  - ESD for fast actuation

Designed for 10m SQL IFO, AEI, Germany

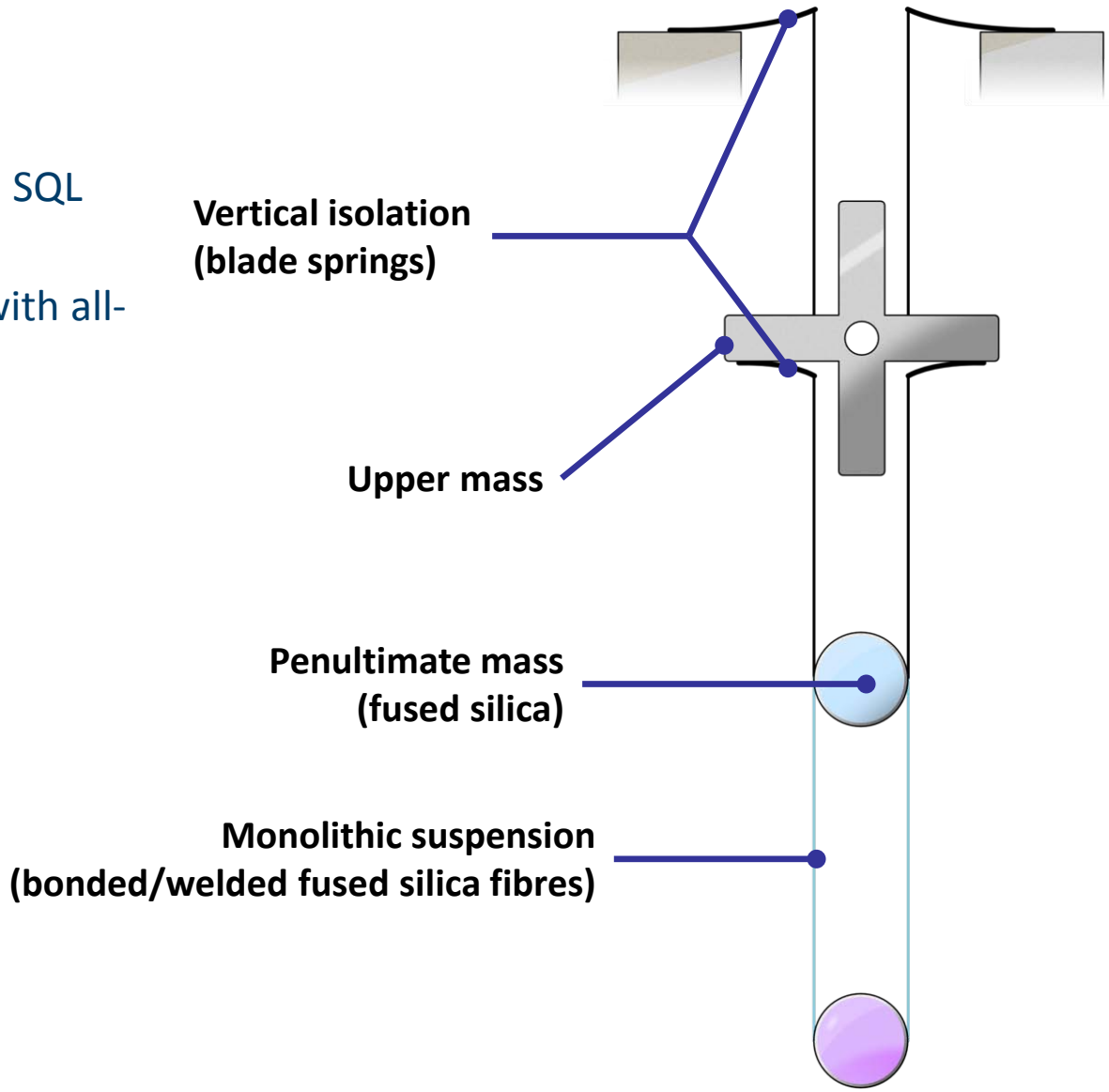

End mirror suspensions

End mirror suspensions

- **Small input mirror suspensions**

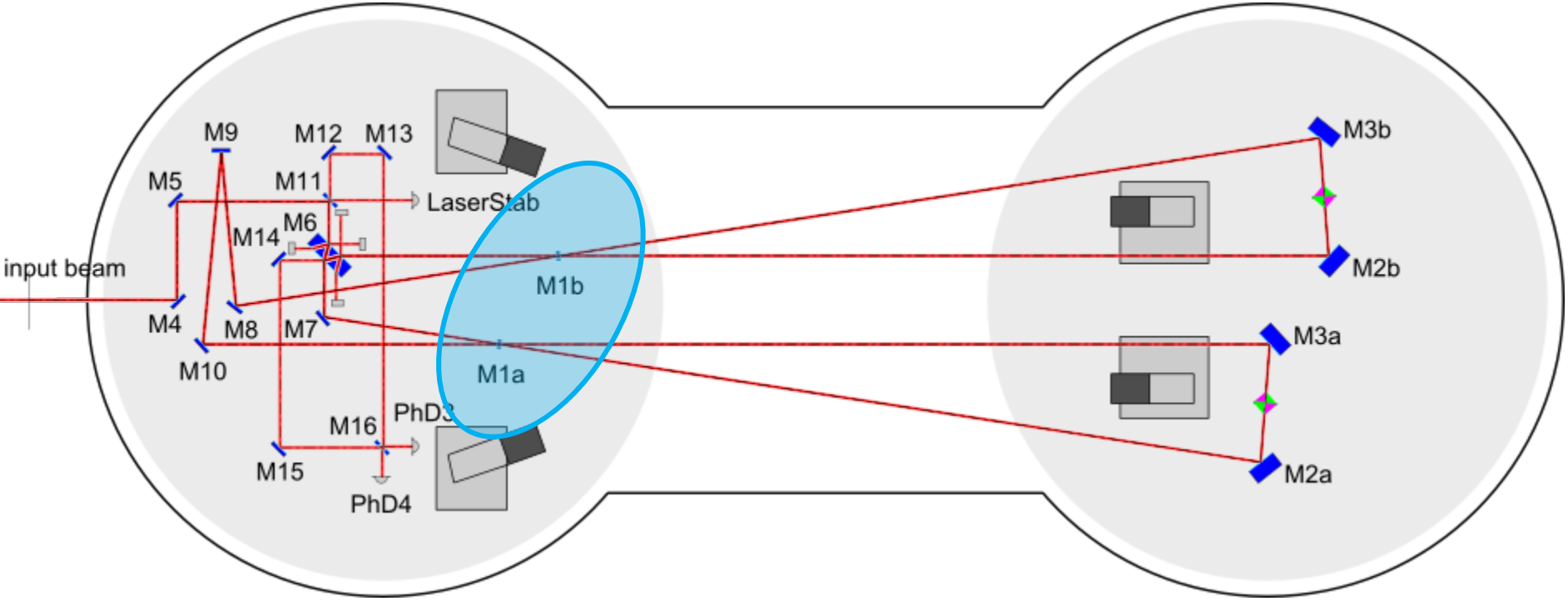

End mirror suspensions

- **Small input mirror suspensions**
  - Mirror mass of about 0.8 grams

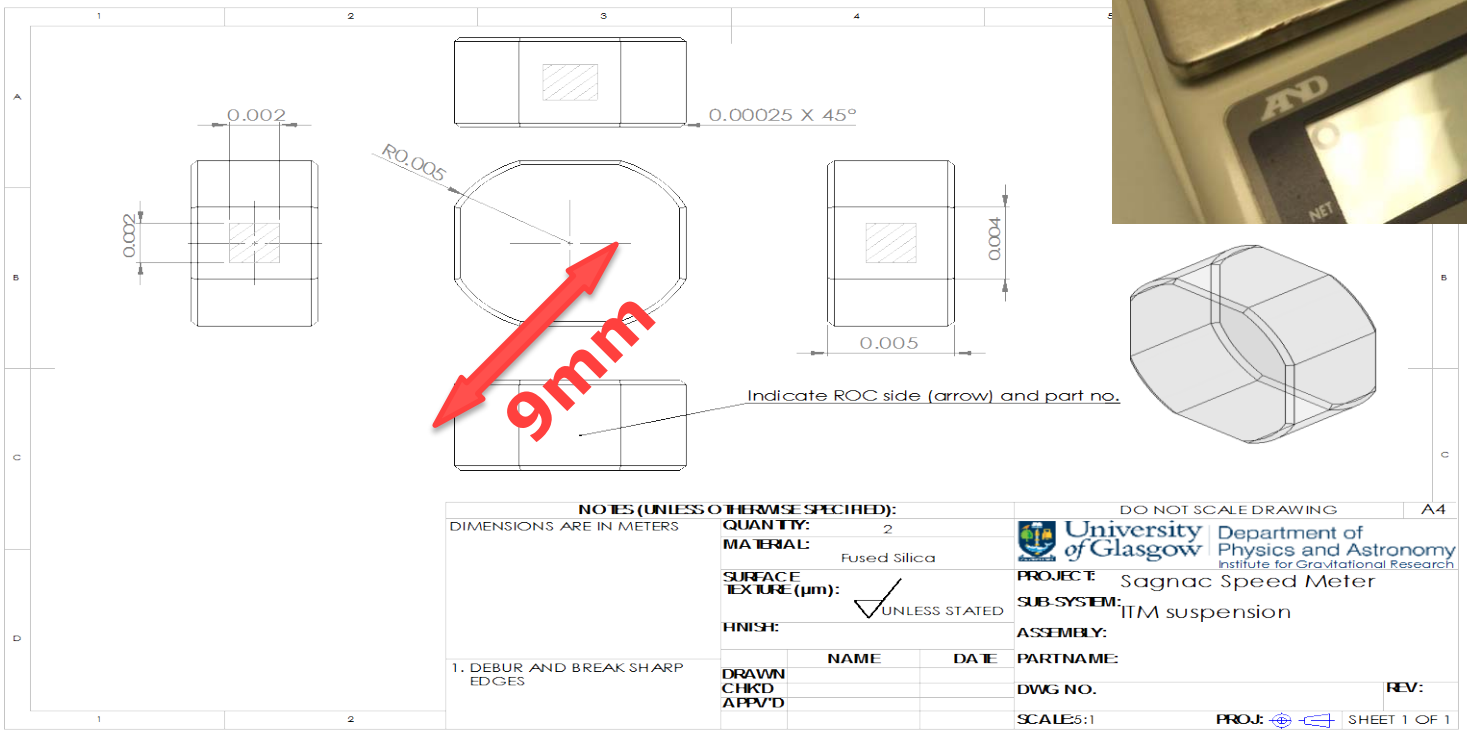

End mirror suspensions

- **Small input mirror suspensions**
  - Mirror mass of about 0.8 grams
  - Monolithic quadruple pendulum design
  - 10cm long, 10µm thick fused silica fibres

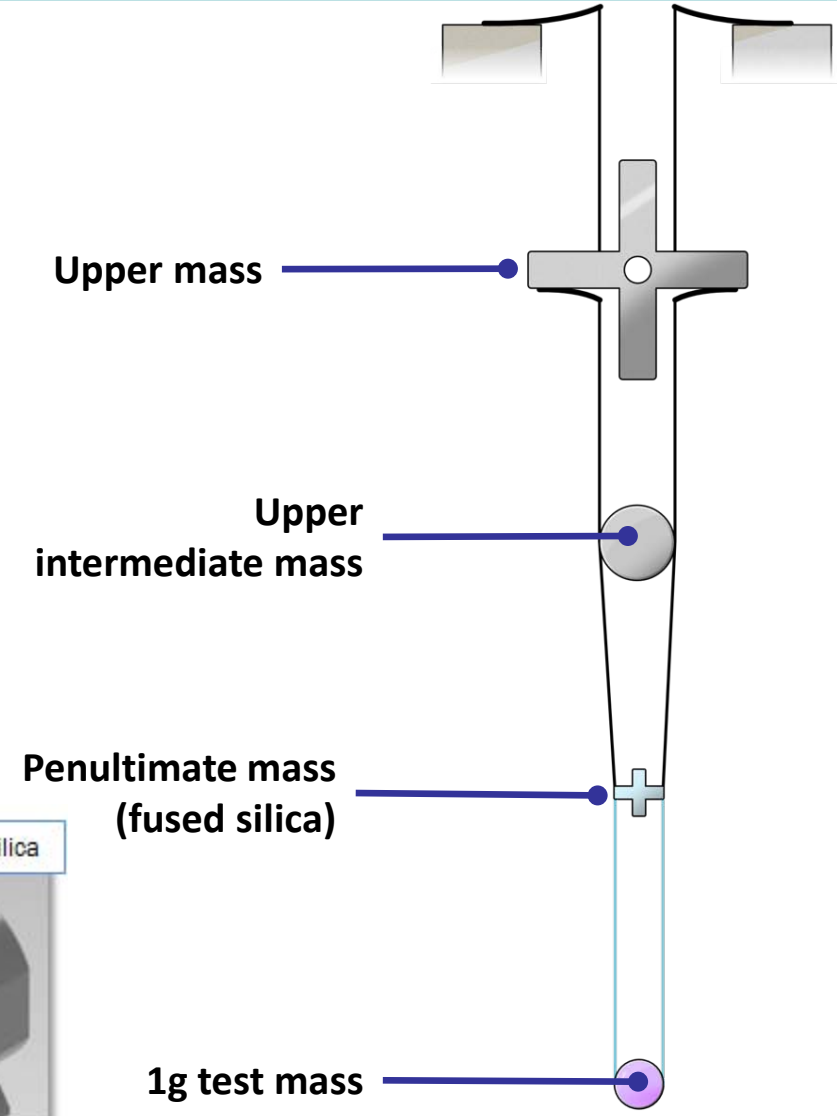

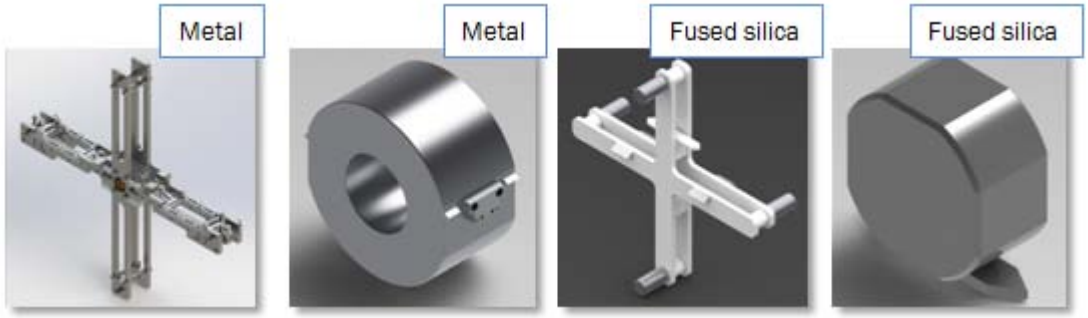

End mirror suspensions

- **Small input mirror suspensions**
  - Mirror mass of about 0.8 grams
  - Monolithic quadruple pendulum design
  - 10cm long, 10µm thick fused silica fibres
  - Fibre attached to cradle-type ear

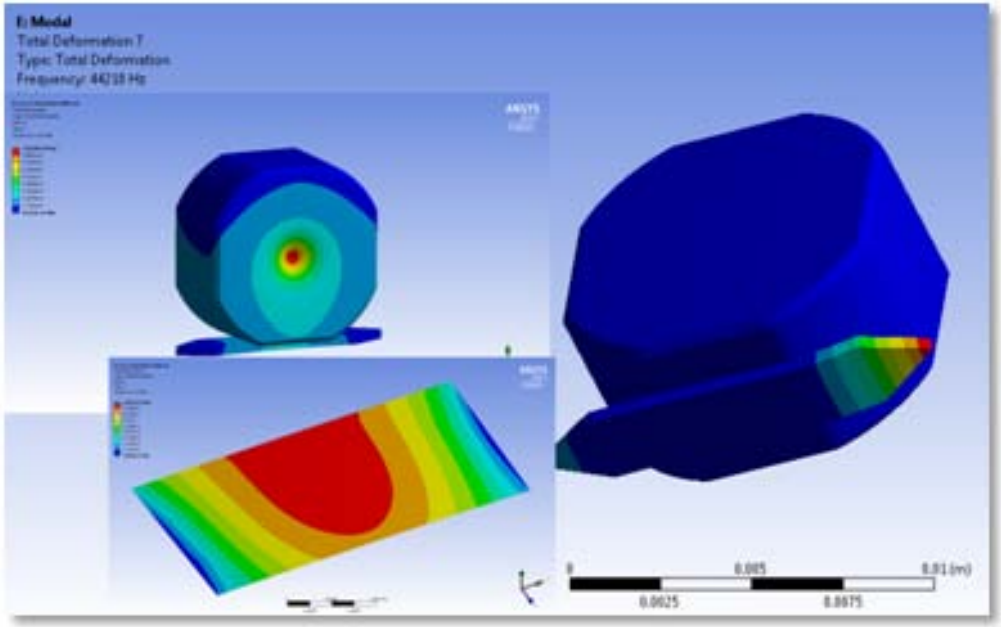

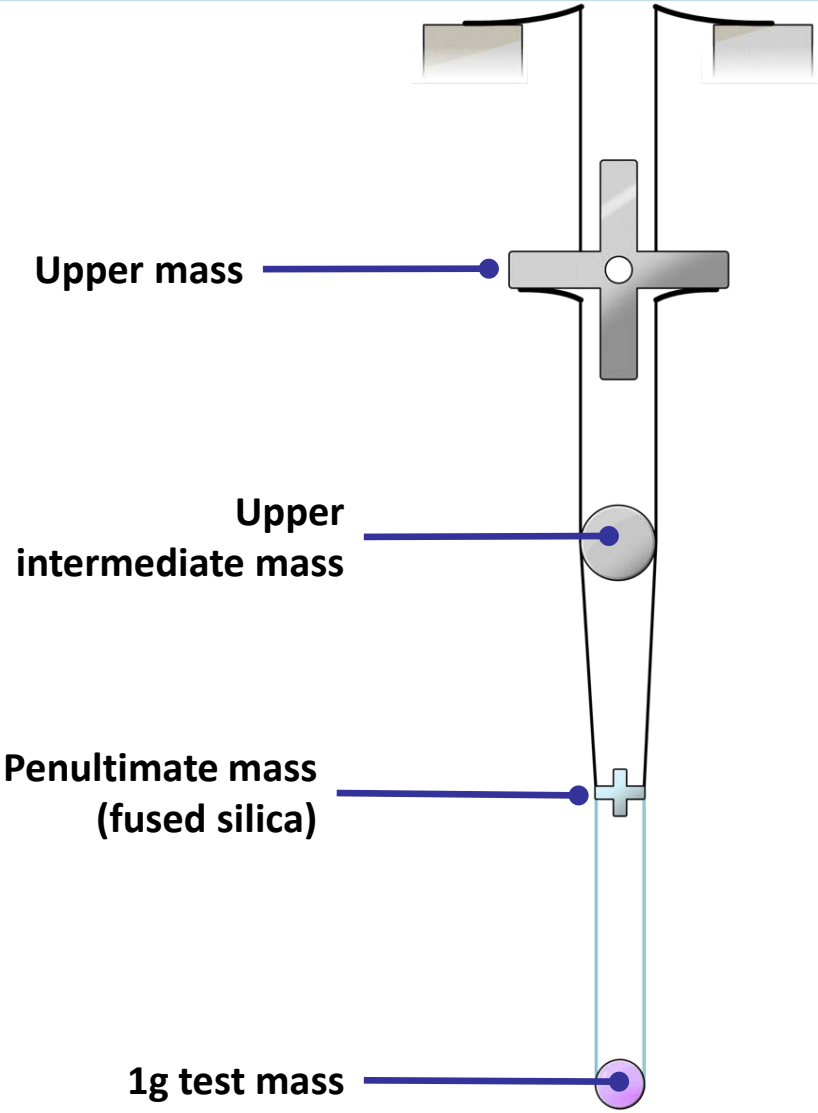

Scattering, loss and mirror specifications

- Very stringent loss & scattering requirements, < 30ppm/cavity
- Simulations with FFT tools (OSCAR), based on real mirror surface maps, to derive specs
- Manufacturing completed – Substrates by Coastline, USA; coatings by LMA, France
- Under investigation: backscattered light coupling in triangular cavities, in collaboration with Prof. S. Vyatchanin, MSU

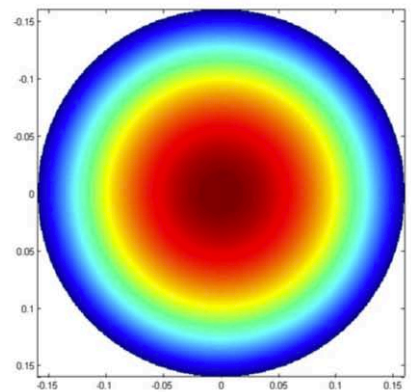

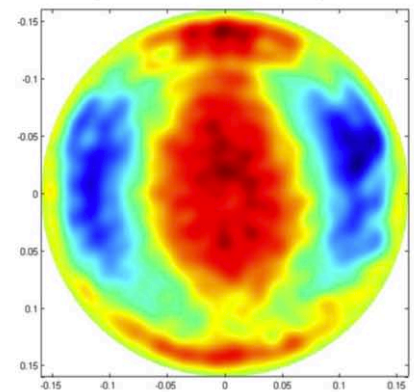

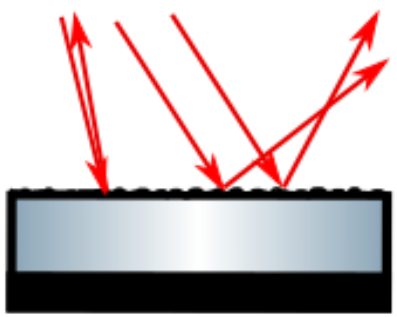

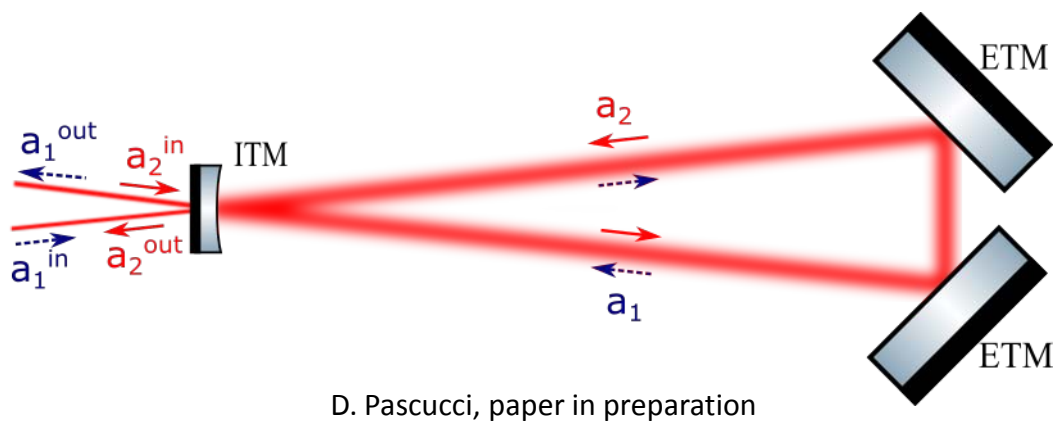

D. Pascucci, paper in preparation

Novel electrostatic actuators

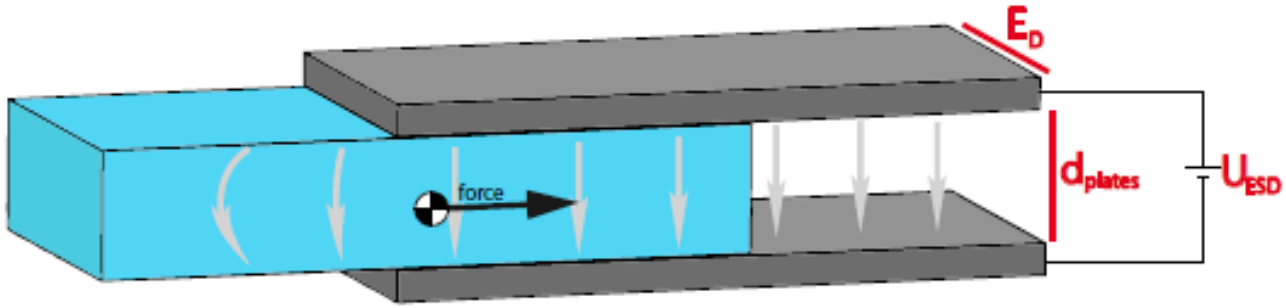

OPEN ACCESS
IOP Publishing
Classical and Quantum Gravity
Class. Quantum Grav. 32 (2015) 175021 (11pp)
doi:10.1088/0264-9381/32/17/175021

New design of electrostatic mirror actuators for application in high-precision interferometry

H Wittel[1], S Hild[2], G Bergmann[1], K Danzmann[1] and K A Strain[1,2]

[1] Max-Planck-Institute for Gravitational Physics and Leibniz Universität Hannover, D-30167 Hannover, Germany
[2] SUPA, School of Physics and Astronomy, The University of Glasgow, Glasgow, G12 8QQ, UK

E-mail: Holger.Wittel@aei.mpg.de

Received 17 November 2014, revised 1 July 2015
Accepted for publication 22 July 2015
Published 19 August 2015

CrossMark

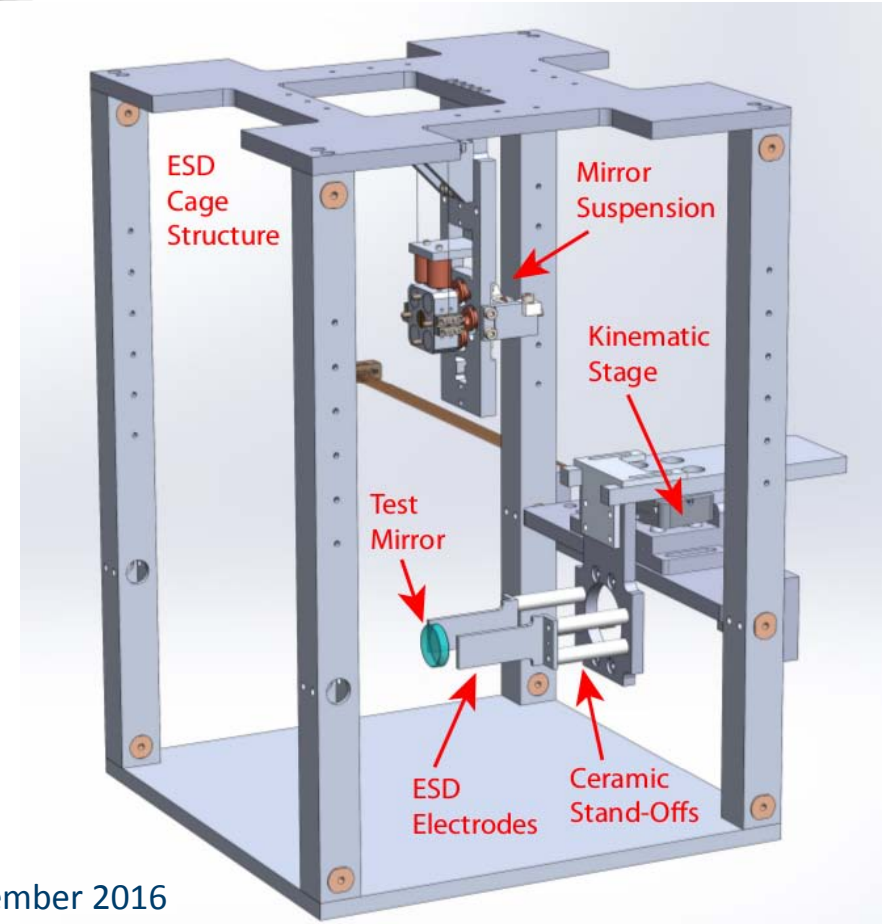

Novel electrostatic actuators

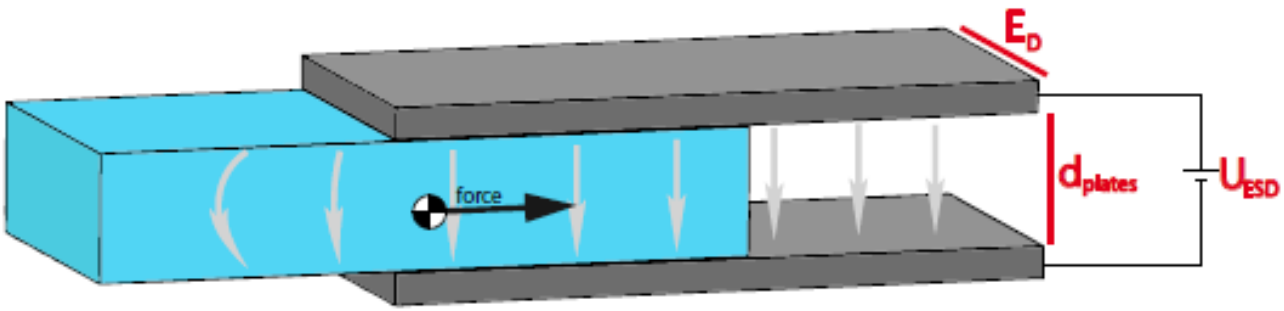

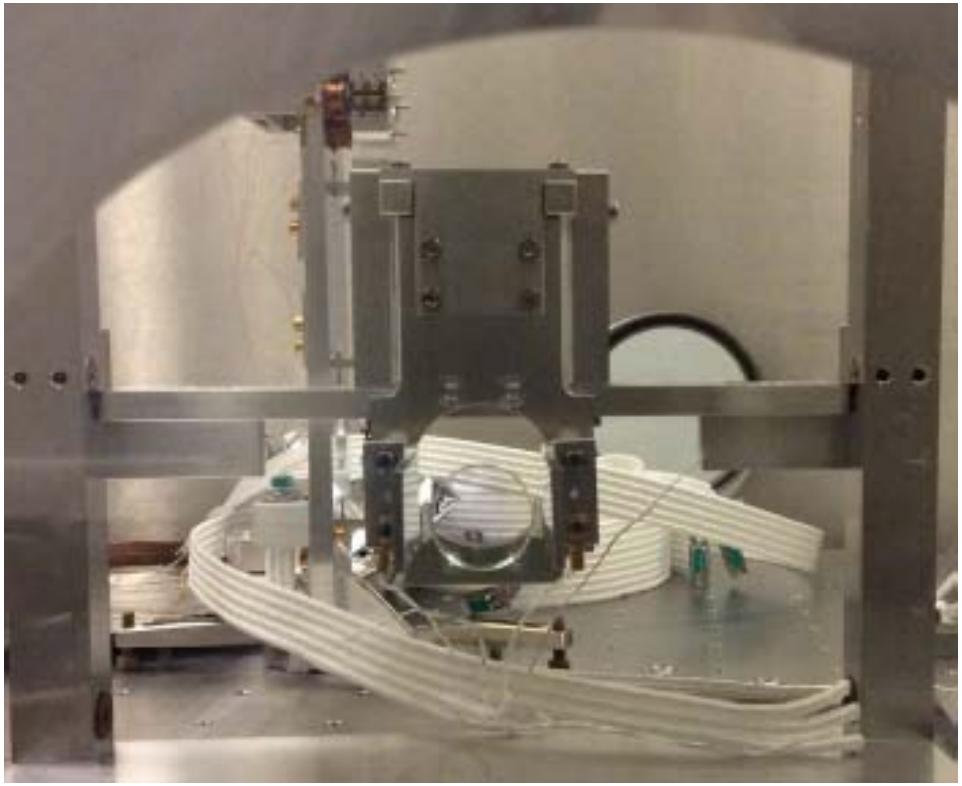

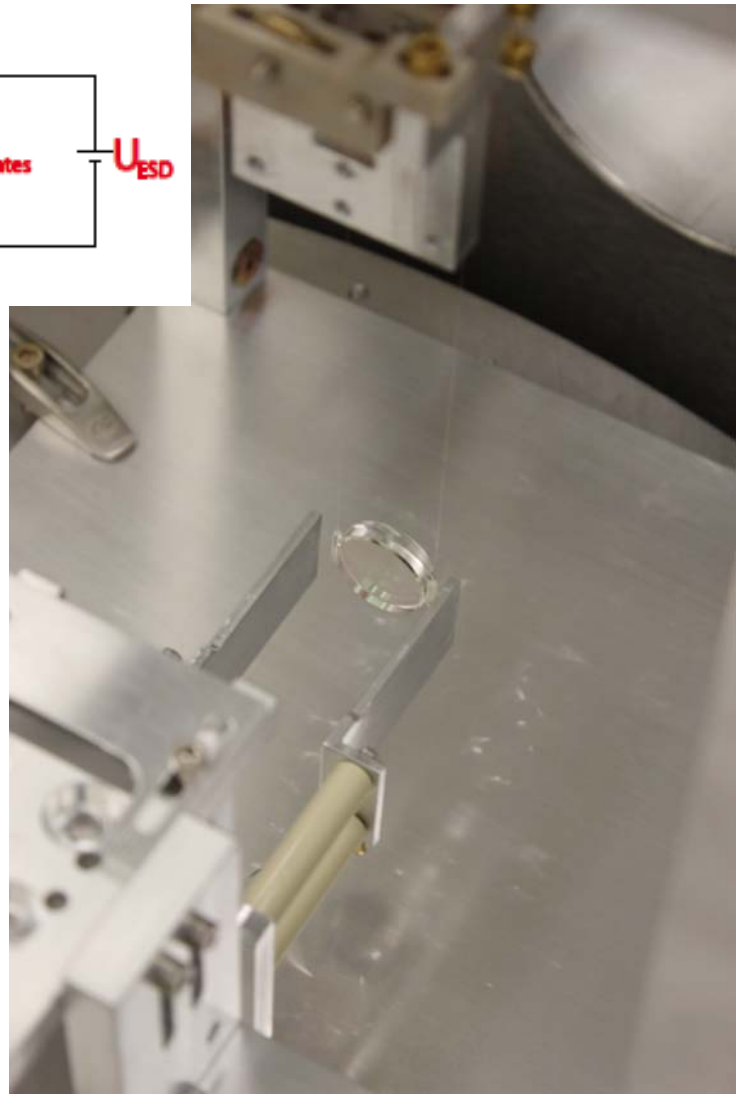

Novel electrostatic actuators

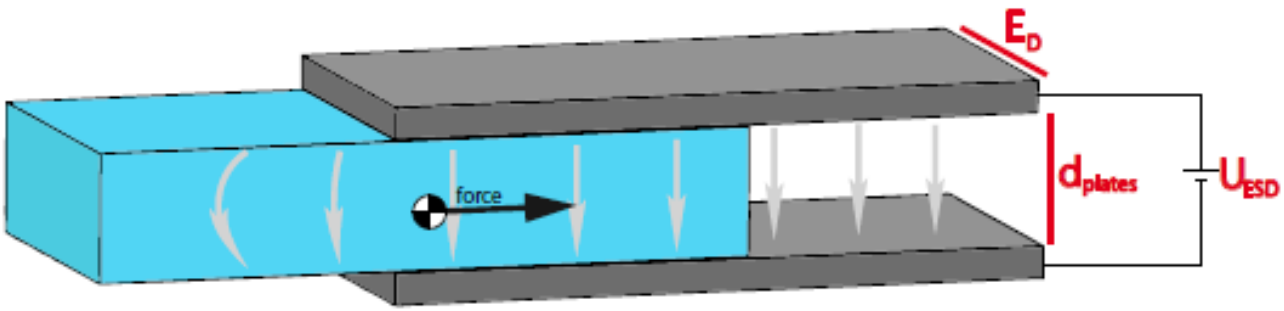

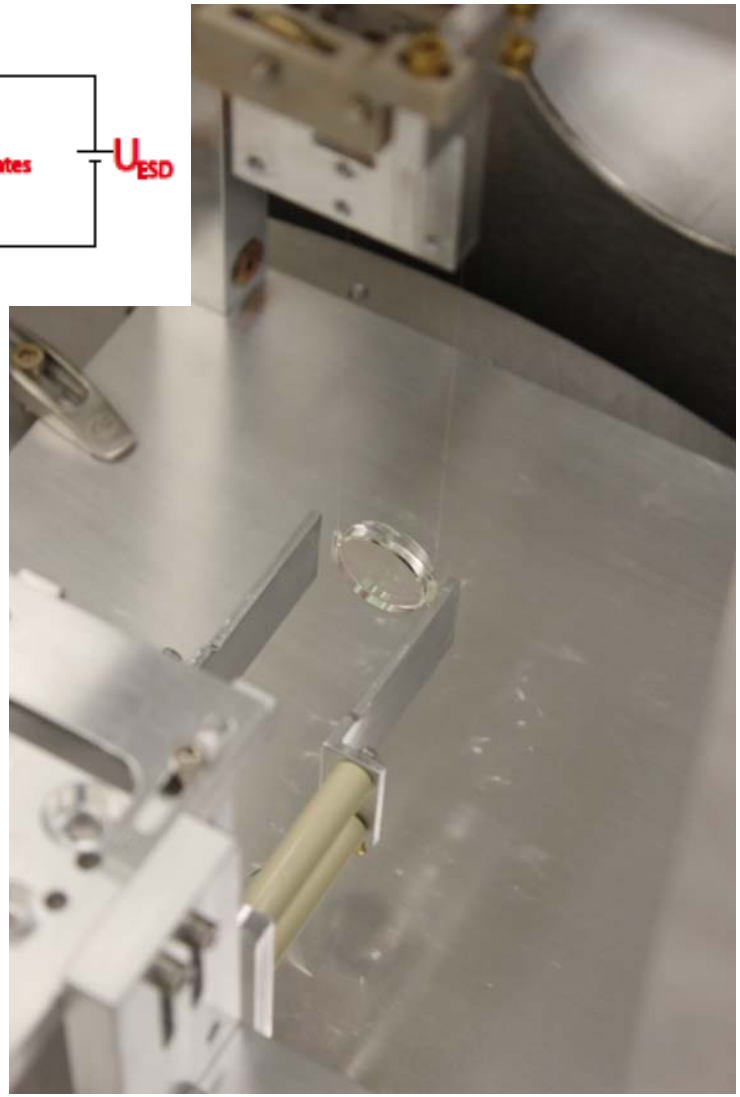

Next: cavity-based characterisation of the actuator prototype

- **ESD actuated mirror will form cavity end mirror – cavity to boost SNR**
- **Remotely controlled kinematic stage for in-situ alignment**
- **Study mirror rotation in deliberately misaligned system, derive alignment requirements**

Balanced homodyne readout

- DC readout won't work, need external LO
- Selecting the right quadrature angle is essential
- Well established tool in bench-top quantum optics experiments, less so in suspended interferometers ...
- Investigated coupling of LO amplitude and phase noise to signal

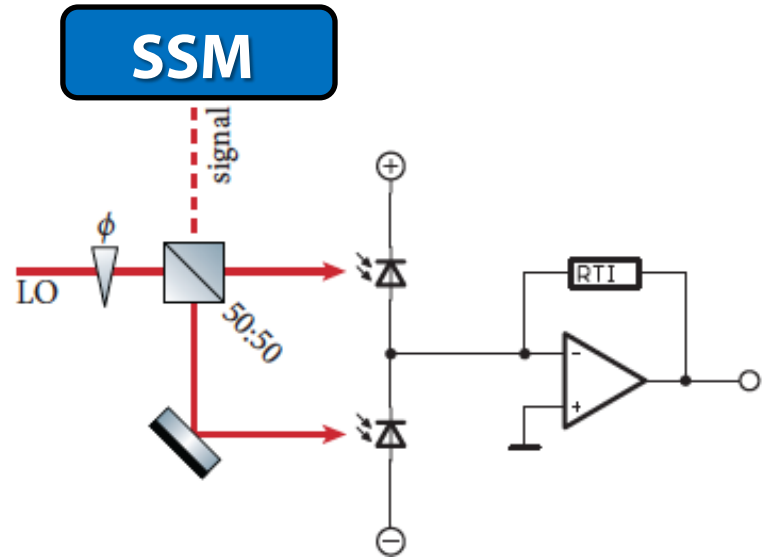

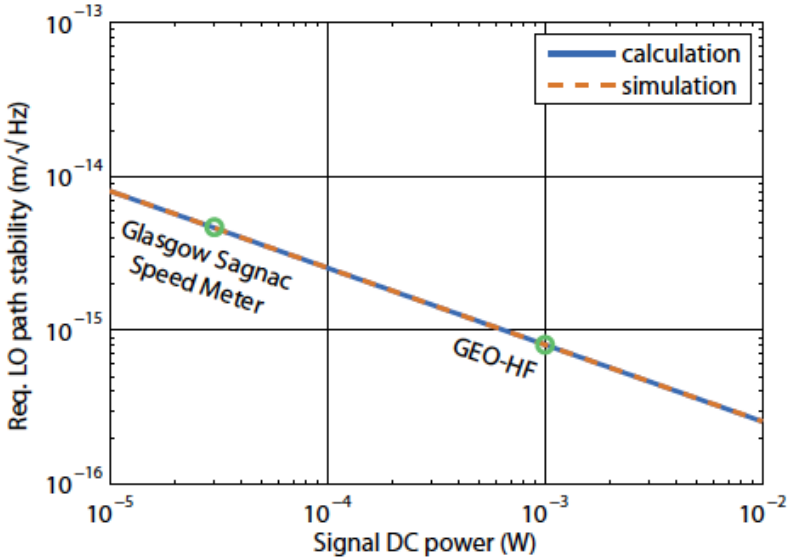

More details:
S. Steinlechner et al. Phys. Rev. D 92, 072009 (2015)

Balanced homodyne readout

- DC readout won't work, need external LO
- Selecting the right quadrature angle is essential
- Well established tool in bench-top quantum optics experiments, less so in suspended interferometers ...
- Investigated coupling of LO amplitude and phase noise to signal
- Investigating
  - Beam jitter coupling – paper in preparation

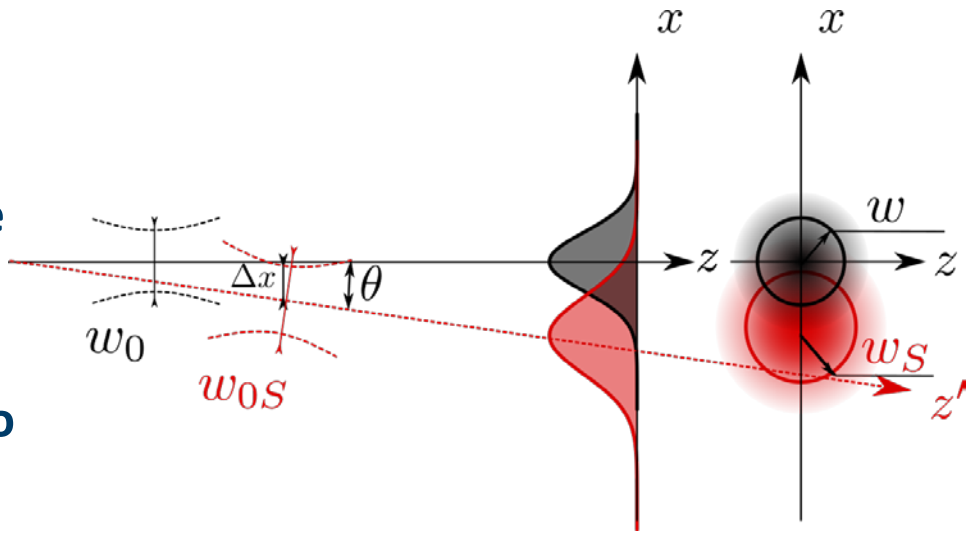

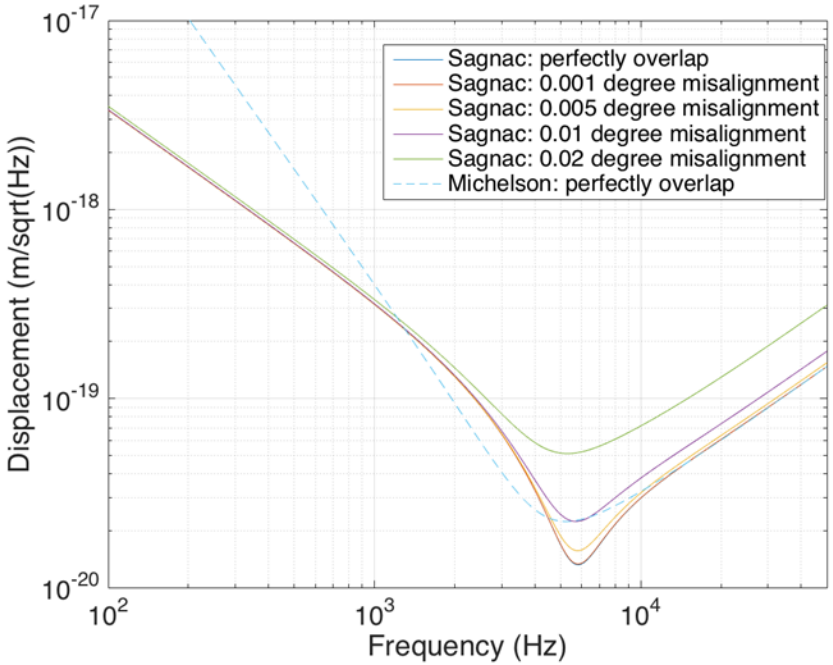

More details:
T. Zhang, in preparation

Balanced homodyne readout

- DC readout won't work, need external LO
- Selecting the right quadrature angle is essential
- Well established tool in bench-top quantum optics experiments, less so in suspended interferometers ...
- Investigated coupling of LO amplitude and phase noise to signal
- Investigating
  - Beam jitter coupling – paper in preparation
  - Laser noise cancellation in BHD

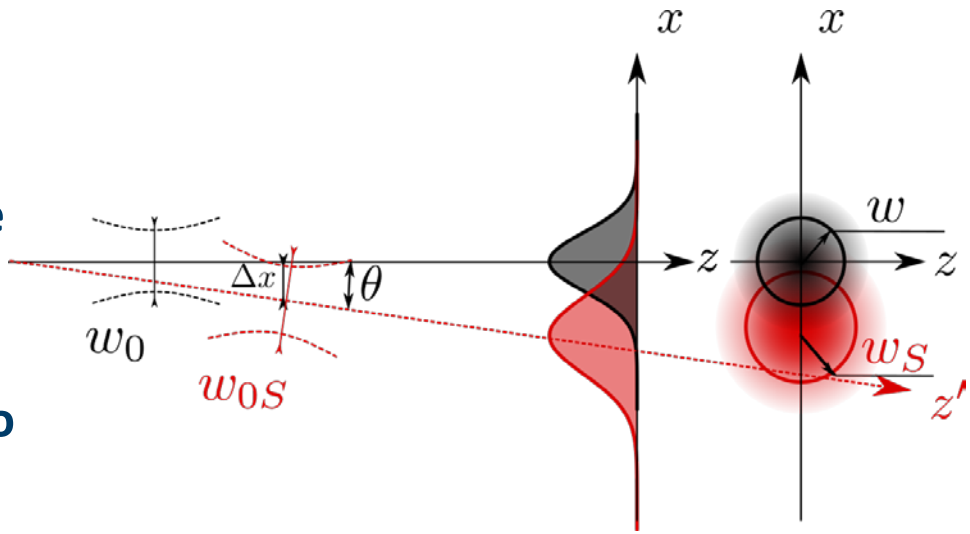

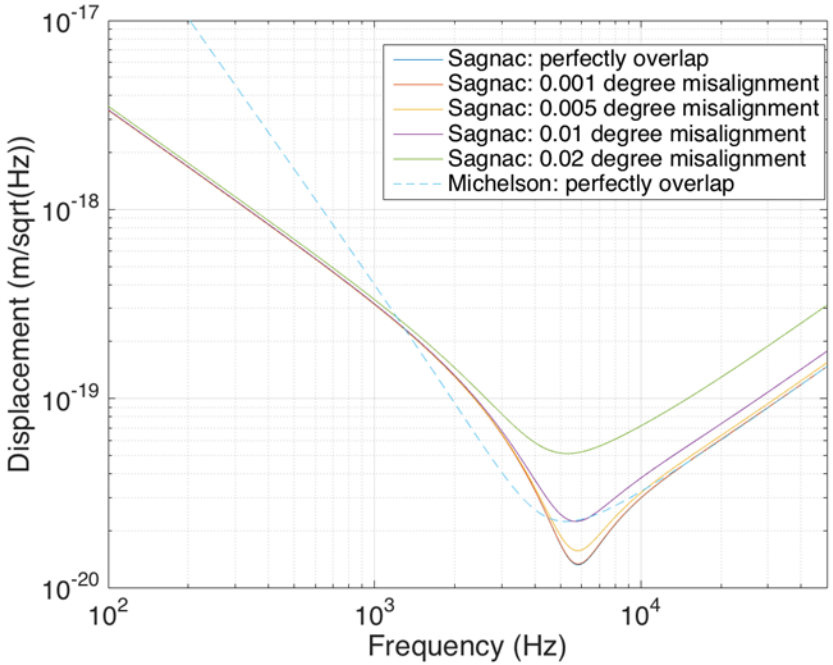

More details:
E A Houston, in preparation

Balanced homodyne readout

- DC readout won't work, need external LO
- Selecting the right quadrature angle is essential
- Well established tool in bench-top quantum optics experiments, less so in suspended interferometers ...
- Investigated coupling of LO amplitude and phase noise to signal
- Investigating
  - Beam jitter coupling – paper in preparation
  - Laser noise cancellation in BHD
- Next: in-vacuum balanced homodyne experiment

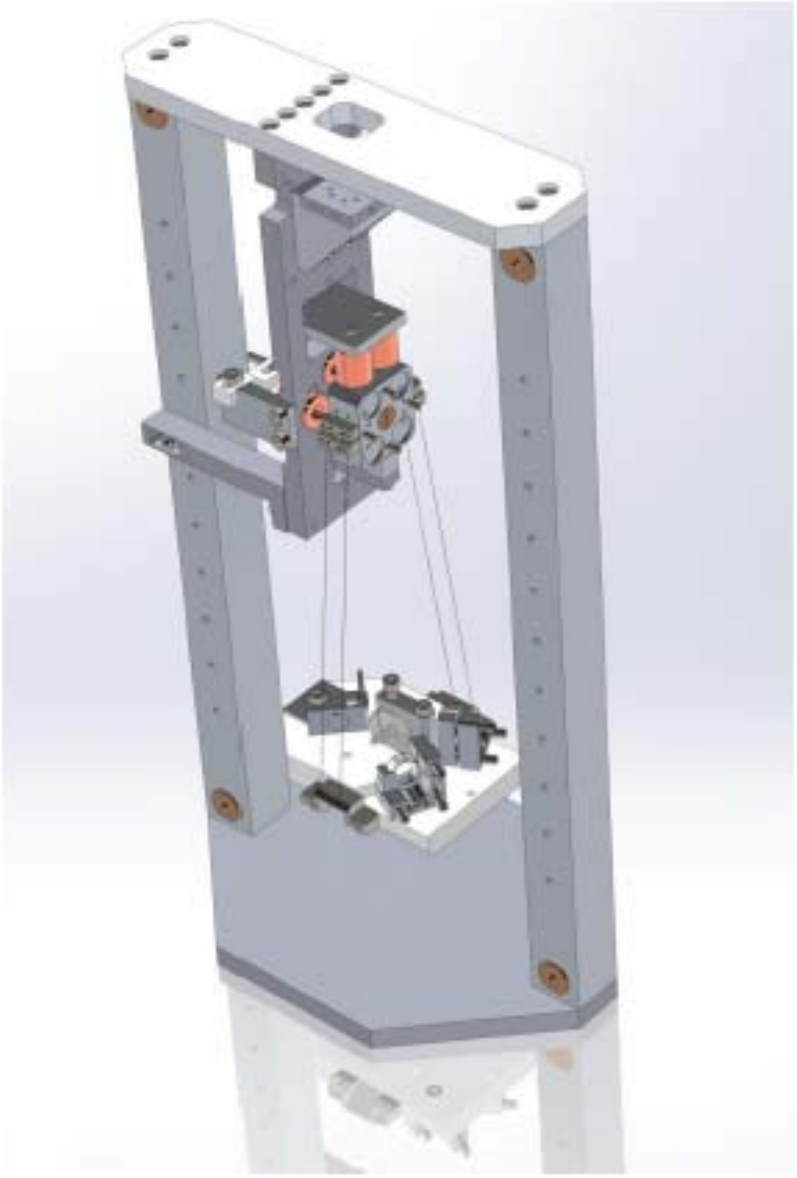

Speed meter signal extraction

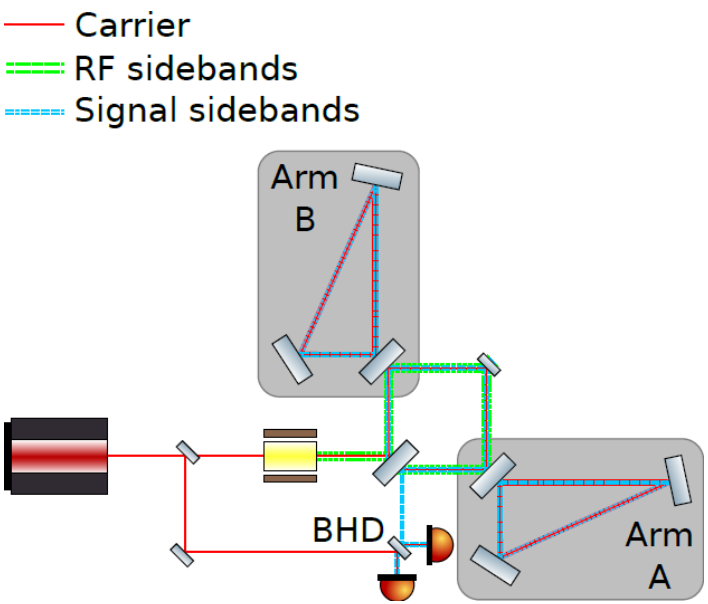

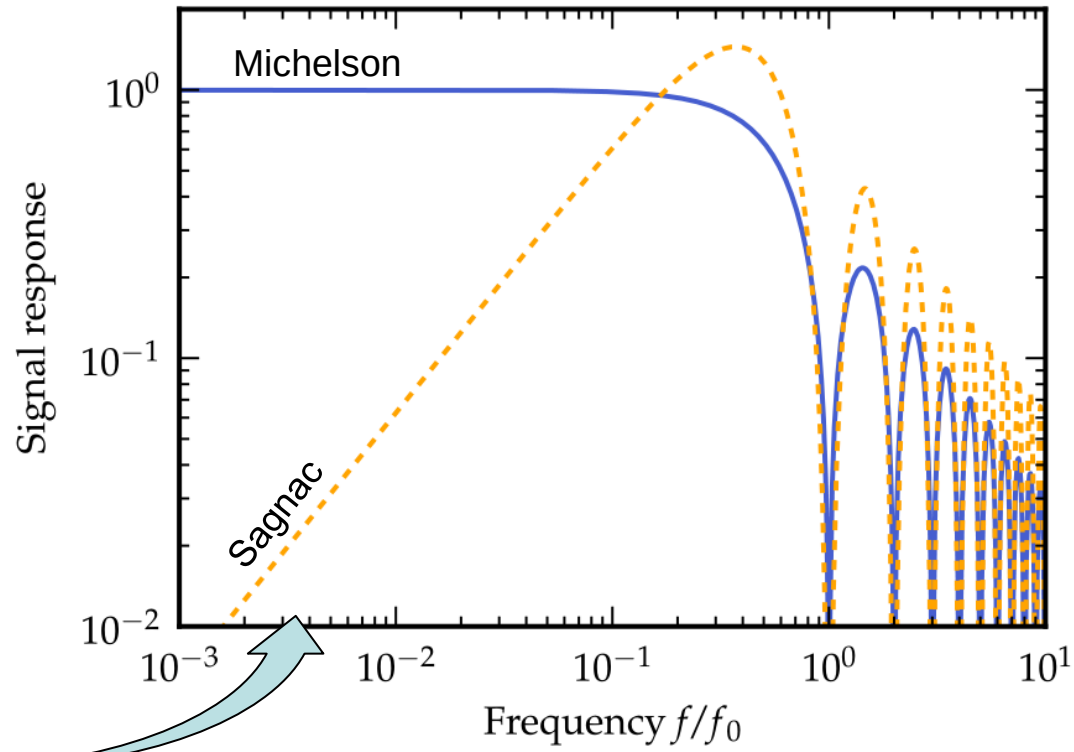

Contrary to Michelson IFO, the Sagnac output is always dark for any (stationary) round-trip length L

- **Vanishing displacement sensitivity towards low frequencies**

How can we extract control signals for the lengths of the arm cavities?

Sensing and control scheme design

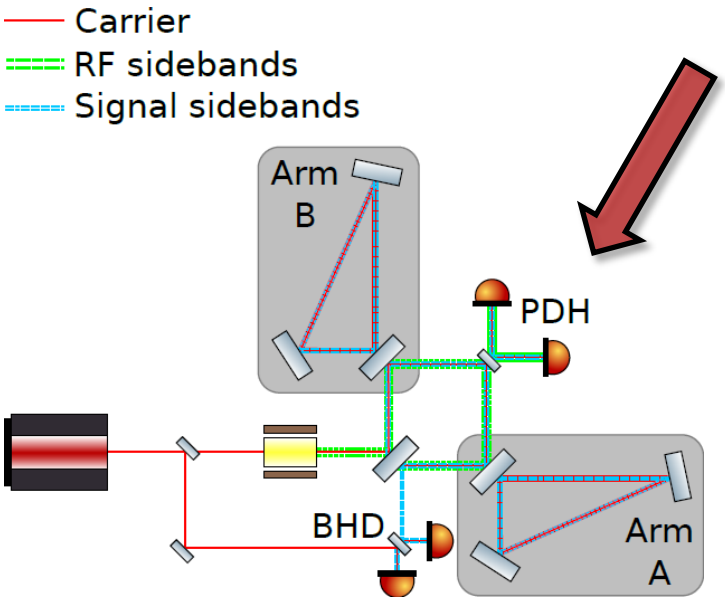

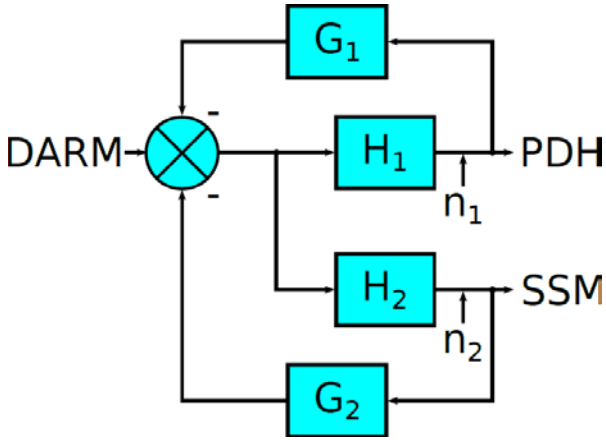

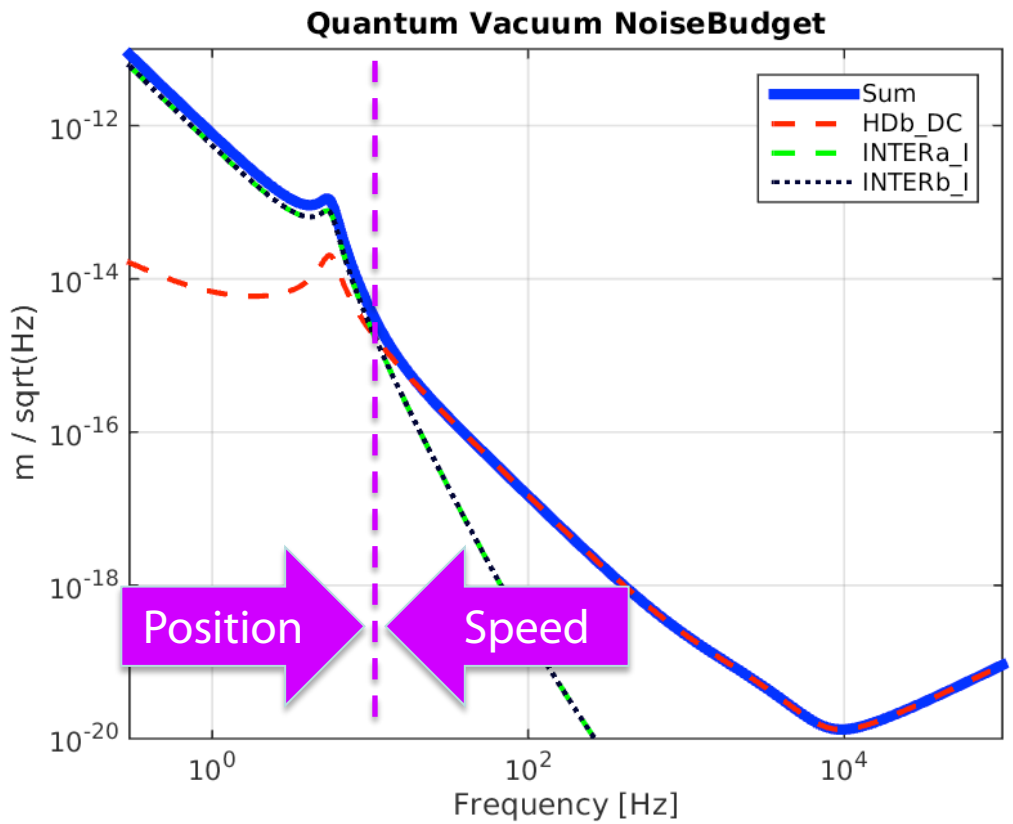

Full details: S. Leavey et al., arXiv: 1603.07756 [gr-qc]

... and much more

Projects not covered in this talk:

- Laser stabilisation (amplitude, frequency, mode-cleaning)
- Detailed analyical and numerical modelling
- Analysis of ring cavity-specifc scattering effects
- Linear cavity test experiment
- Environmental monitoring (seismic, etc.)
- Digital control system prototyping and commissioning
- Electronics design and commissioning
- Interferometer lock acquisition studies
- Fused silica fibre pulling tests and optimisation
- Blade spring tests
- Characterisation of optical elements
- Etc, etc, etc ...

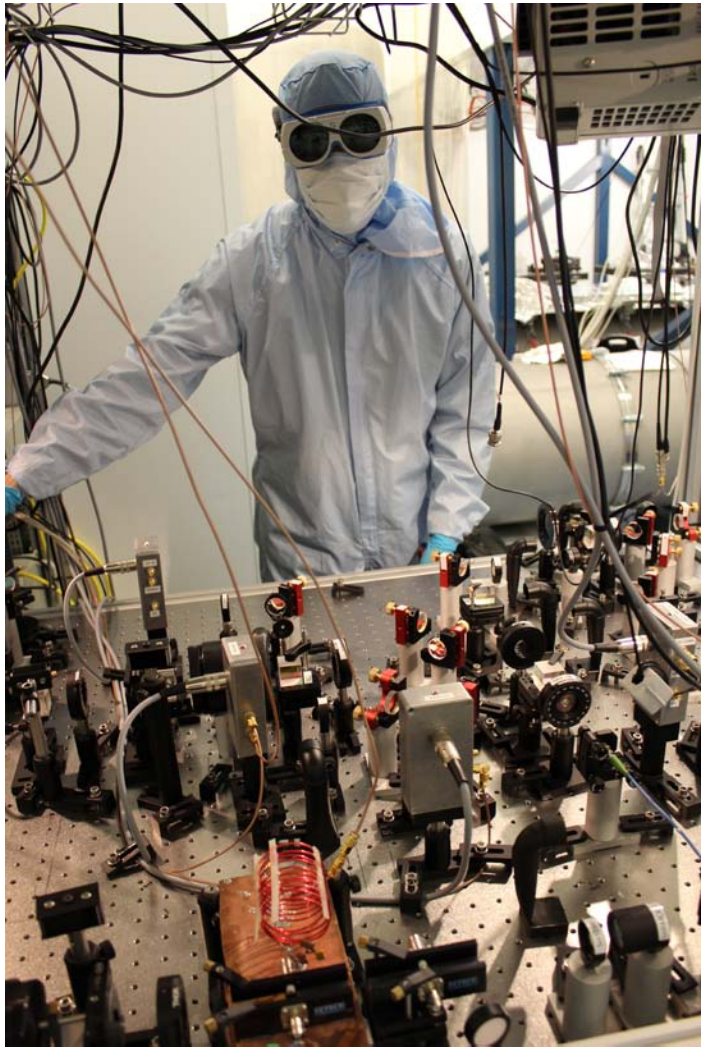

Meet the ERC speed meter team

Daniela Pascucci

Alasdair Houston

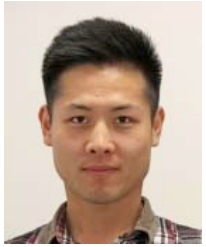

Teng Zhang

Christian Gräf

Russell Jones

Sean Leavey

Stefan Hild

Sebastian Steinlechner

Jan-Simon Hennig

Stefan Danilishin

With lots of help from:

Ken Strain, Bryan Barr, Angus Bell, Liam Cunningham, Borja Sorazu, Sabina Huttner, Jennifer Wright, Andrew Spencer

... and our international friends and colleagues

Second international speed meter workshop at "The Burn", Angus, Scotland, June 2016

Outline

- **Motivation for Speed Meters**
  - **Quantum noise**
  - **Speed meter configurations**

- **Introducing the Glasgow Sagnac Speed Meter proof of concept experiment**
  - **Design and scientific aims**
  - **Current status of the experiment**

- **Future directions in Speed Meter research at Glasgow**

Integrated research programme

- 2012-2017: ERC proof of concept experiment
  - Planned installation finish: Aug 2016
  - Proof of concept, low noise testbed, in vacuum BHD, QND characterisation
- 2014-2016: 10m armcavity ring-vs-polarisation
  - 1550nm laser development
  - Characterisation of polarisation optics 1064 & 1550nm
- 2016-2019: Full 10m speed meter prototype at 1550nm
  - Control Studies, Scattered Light+ polarisation optics characterisation
  - Sloshing Sagnac: Combined reduction of coating and quantum noise.
- 2017-2019: Fancy Add-ons
  - Squeezing
  - Signal Recycling and negative inertia

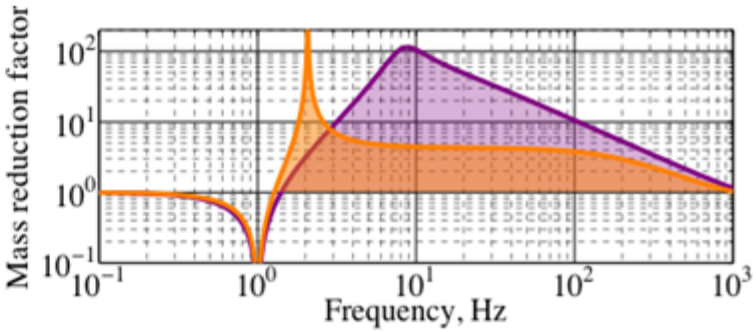

Polarisation Sagnac configuration

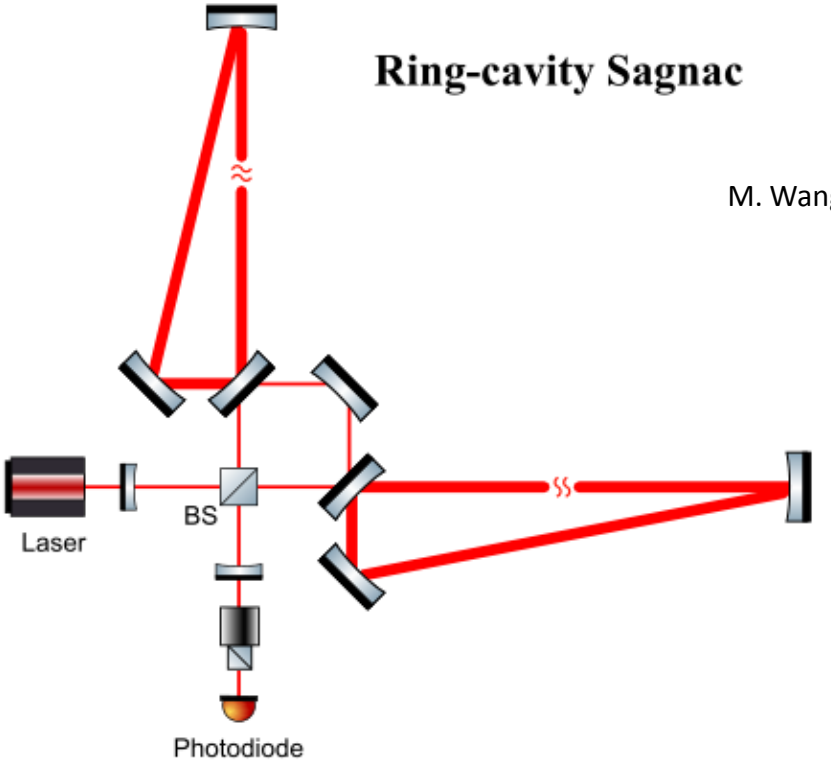

M. Wang, PhD thesis

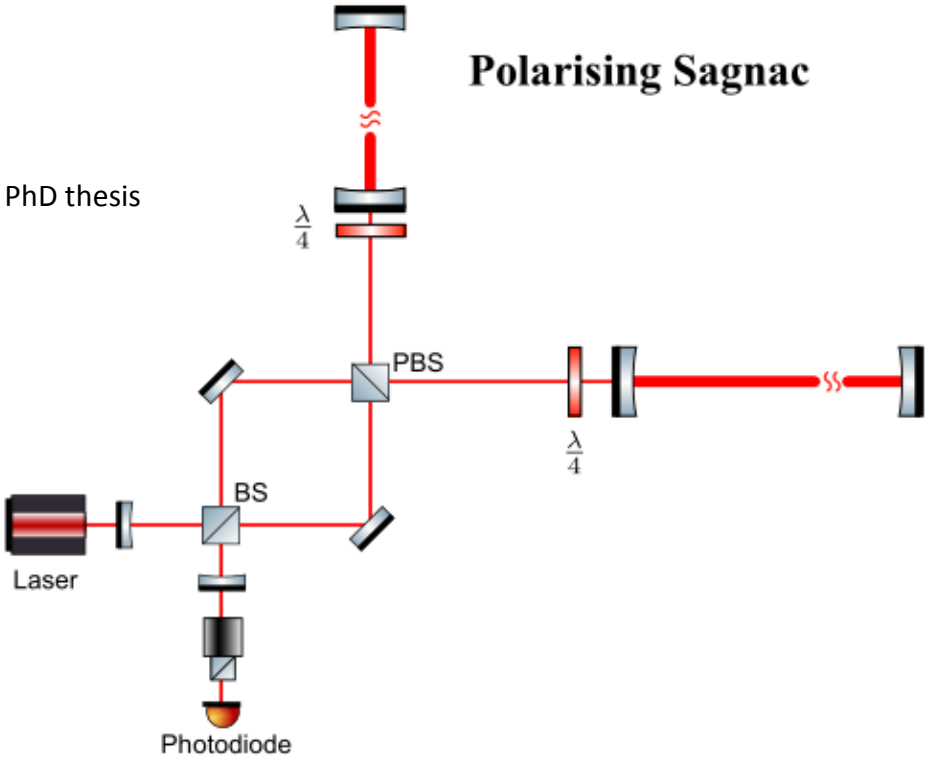

- Requires large cavity optics because of 45deg AOI
- Possible issue of small-angle scattering coupling the two directions

- Requires high-quality, large-area polarising optics, possibly far beyond current technologies

Glasgow Polarisation Sagnac experiment

- **Simple first stage - proof of principle**
  - Characterise polarisation optics – thin film polarisers, QWP's
  - Completely upgrade our vacuum and suspension system
  - Changing wavelength to 1550nm
  - Begin with single arm test – inform full Sagnac later…

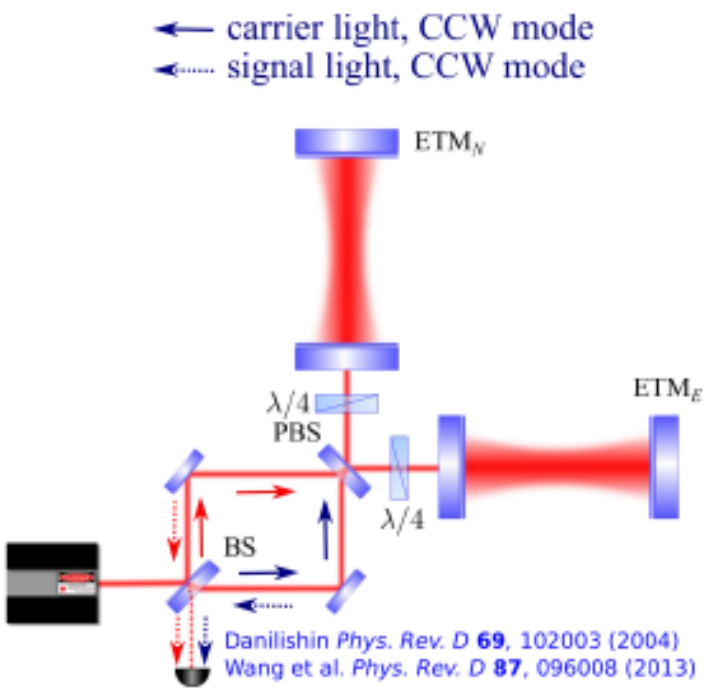

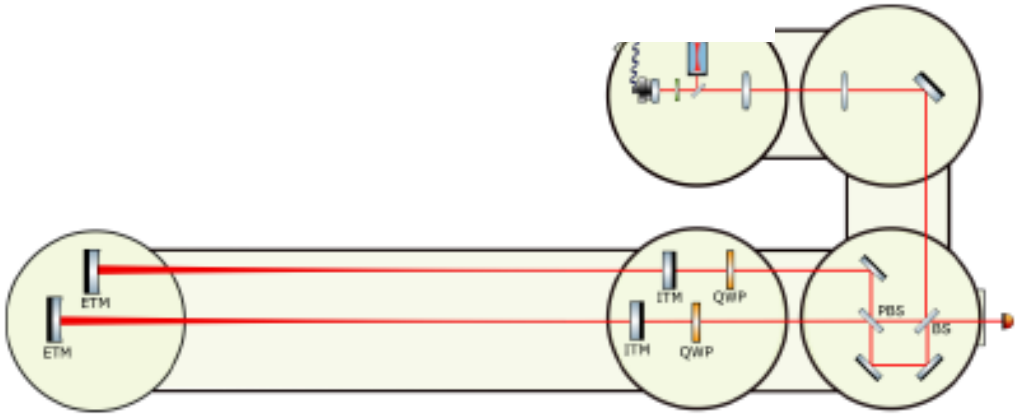

10m system upgrade

- Major reconfiguration of our system:
  - Removed all the suspensions and infrastructure from inside the vacuum system and replaced them with new designs.
  - Redesigned for flexibility and ease of operation.

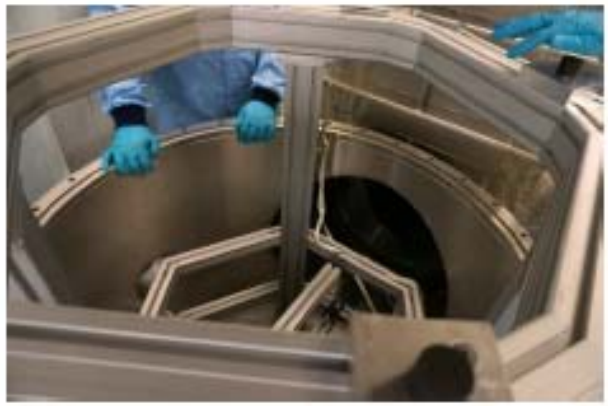

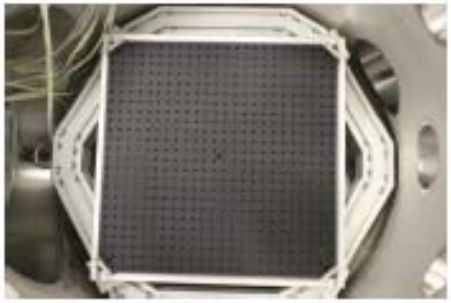

Early days...

- Putting it all together
  - Suspensions built, controlled and in place
  - 1550nm laser stabilisation and amplification characterisation (now!)

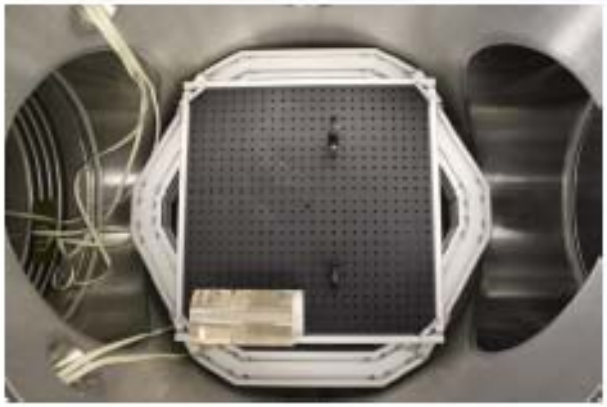

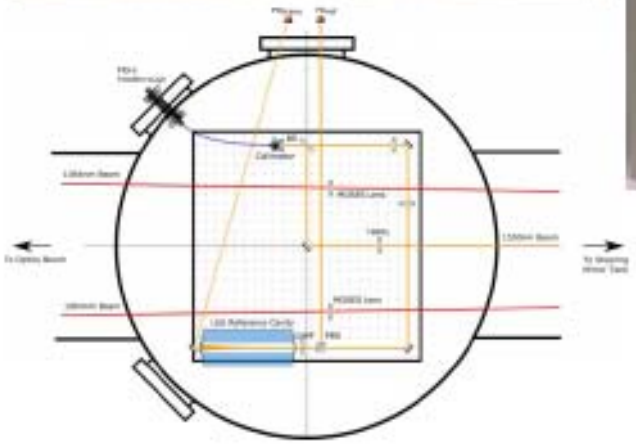

Thank you for your attention!

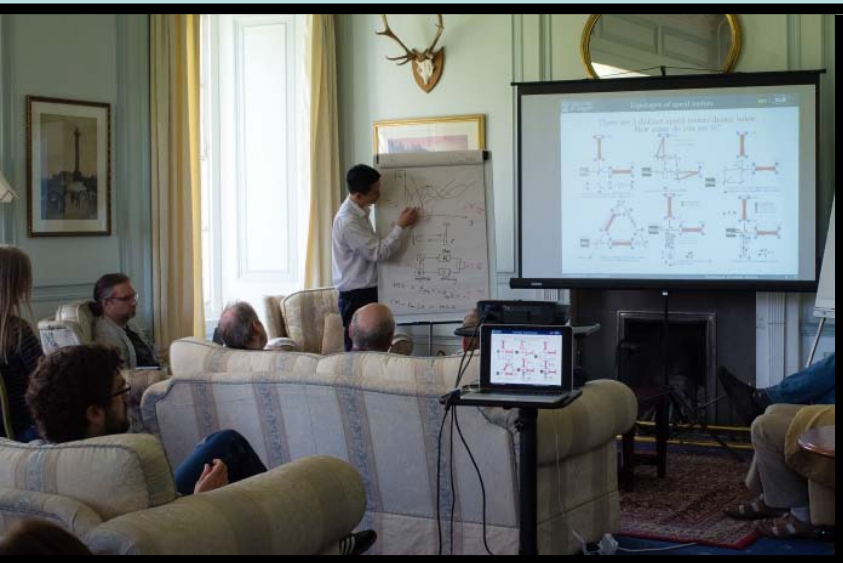

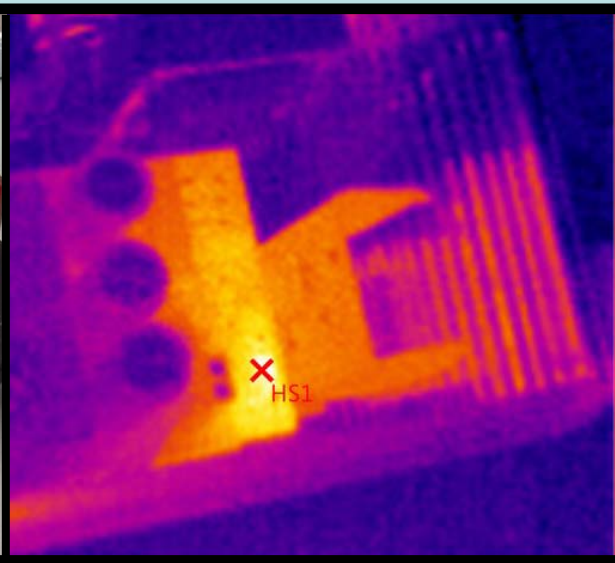

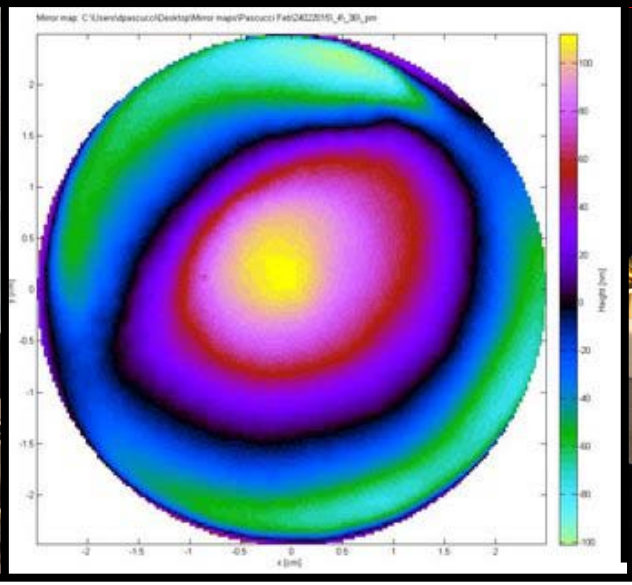

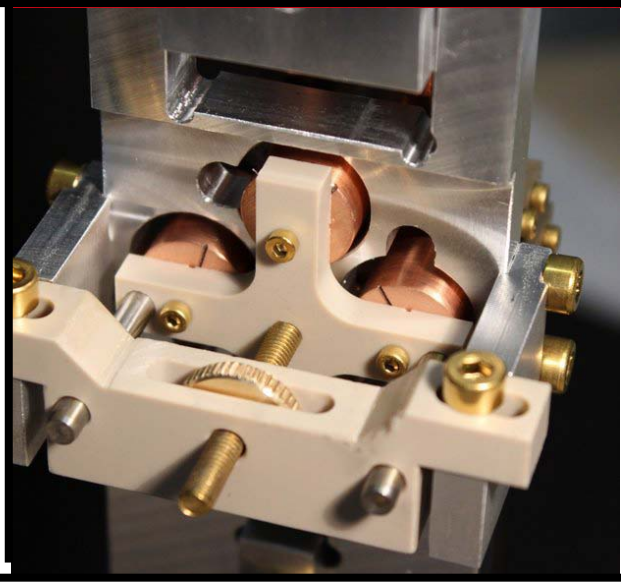

Visit us on **http://www.speed-meter.eu**